PI NOLEAK PES
ENTERPRISES CORPORATION
NO LEAK BETWEEN THE PIPES



XGQT14

GROOVED CROSS FITTING



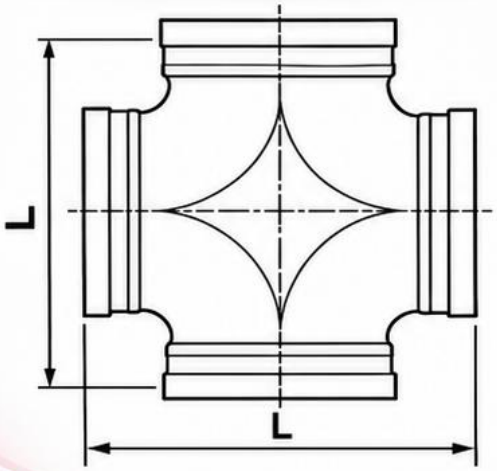

Working Pressure:
300 PSI / 2.07 MPa

Nominal Size mm/in	Pipe O.D mm/in	Working Pressure PSI/MPa	Dimension L mm/in
25 1	33.7 1.315	300 2.07	57 2.244
32 1¼	42.4 1.66	300 2.07	60 2.362
40 1½	48.3 1.9	300 2.07	60 2.362
50 2	60.3 2.375	300 2.07	70 2.756
65 2½	73 2.875	300 2.07	76 2.992
65 30D	76.1 3	300 2.07	76 2.992
80 3	88.9 3.5	300 2.07	86 3.386
100 4	114.3 4.5	300 2.07	102 4.016
125 5½OD	139.7 5.5	300 2.07	122 4.803
150 6½ OD	165.1 6.5	300 2.07	140 5.512
150 6	168.3 6.625	300 2.07	140 5.512
200 8	219.1 8.625	300 2.07	175 6.890
250 10	273 10.75	300 2.07	215 8.465
300 12	323.9 12.75	300 2.07	245 9.646

09159252309 | nowserving02@gmail.com / nowserving03@gmail.com | www.pinoleakpes.com