RESILIENT SEATED GATE VALVE
Mechanical Type

Hη
Herco-Tech
ηH

* Connection: Mechanical joint,
* Working pressure: PN10 / PN16
* Temperature range: 0℃ ~ 80℃
* Fusion bonded epoxy coating

ITEM	PART NAME	MATERIAL
1	Body	Ducitile iron
2	Disc	EPDM+DI
3	Bonnet Gasket	NBR
4	Stem	SS420
5	Bonnet	Ducitile iron
6	Thrust Washer	Brass
7	Holding Ring	Brass
8	Thrust Nut	Brass
9	Gland	Ducitile iron
10	Cap	Ducitile iron
11	Cap bolt	SS304
12	Dust Cover	NBR
13	O-Ring	NBR
14	O-Ring	NBR
15	O-Ring	NBR
16	O-Ring	NBR
17	Stem nut	Brass

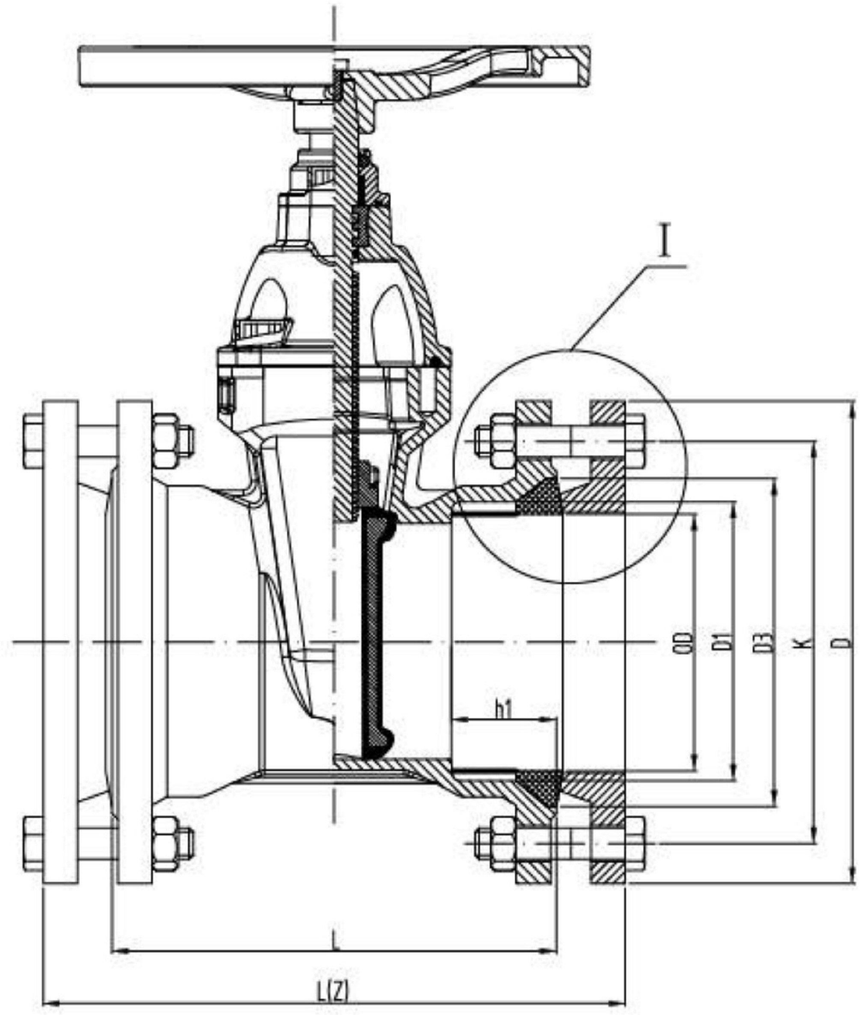

Size DN	PIPE OP PVC	DIMENSIONS						Num.of turns to close	Closing Torque (N.m)
		L	D 1	D 2	D 3	K	D		
DN50	63	178	69	70.6	87.4	125	165	9	30
DN75	90	203	96	97.6	115.8	160	200	12	35
DN100	110	229	116	121.2	140	180	230	12	40
DN150	160	267	166	171.2	194	240	285	17	70
DN200	225	292	231	236.2	258	295	340	18.5	120
DN250	280	330	286	291.2	314	360	405	23	150
DN300	315	356	321	326.2	349	410	460	27	180