Worldwide Contacts | www.tyco-fire.com

Model AV-1-300 Alarm Check Valve, 300 psi (20,7 bar) 2-1/2, 4, 6 & 8 Inch (DN65, DN100, DN150 & DN200) Vertical or Horizontal* Installation

General Description

The TYCO Model AV-1-300 Alarm Check Valves are divided seat ring, rubber-faced clapper, waterflow alarm check valves that are intended for use in wet pipe (automatic sprinkler) fire protection systems. They may be installed vertically or horizontally*, and they are designed to automatically actuate electric and/or hydraulic alarms when there is a steady flow of water into the system that is equivalent to the discharge rate of one or more sprinklers.

A separately ordered Model RC-1 Retard Chamber (Ref. Technical Data Sheet TFP920) is required for installations subject to variable pressures. It is used to help prevent false alarms associated with pressure variations in public water supplies.

The AV-1-300 Alarm Check Valve Trim includes pressure gauges to monitor system pressure conditions, a bypass check valve, a main drain valve, and an alarm test valve. The bypass check valve reduces the possibility of false alarms by permitting slow as well as small transient increases in water supply pressure to be passed through to the system without opening the waterway clapper.

NOTICE

The TYCO Model AV-1-300 Alarm Check Valves described herein must be installed and maintained in compliance with this document, as well as with the applicable standards of the NATIONAL FIRE PROTECTION ASSOCIATION (NFPA), in addition to the standards of any authorities having jurisdiction. Failure to do so may impair the integrity of these devices.

The owner is responsible for maintaining their fire protection system and devices in proper operating condition. Contact the installing contractor or product manufacturer with any questions.

Technical Data

Approvals
UL and C-UL Listed
FM Approved

Working Water Pressure Range
20 to 300 psi (1,4 to 20,7 bar)

Friction Loss
Refer to Graph A.

End Connections
Groove x Groove
Flange x Groove
Flange x Flange
Refer to Table A for size applicability

Weights
Refer to Table A.

Physical Characteristics
The body is ductile iron, the hand-hole cover is ductile iron, and the seat ring is bronze. The clapper for the 2-1/2 in. (DN65) valve size is stainless steel. The clapper for the larger valve sizes is ductile iron. All valve sizes utilize an EPDM clapper facing.

Flanged connections are available drilled per ANSI, ISO, AS, and JIS specifications as detailed in Table B.

Threaded port connections for the AV-1-300 Valves are available NPT threaded or threaded per ISO 7-1 as detailed in the Ordering Procedure section. Valves with NPT threaded ports will readily accept the trim arrangements detailed in Figures 4 through 6.

UL c UL FM APPROVED

* 4, 6, and 8 inch (DN100, DN150, and DN200) valve sizes

IMPORTANT
Refer to Technical Data Sheet TFP2300 for warnings pertaining to regulatory and health information.

VALVE PARTS

NO.	DESCRIPTION	QTY.	REF.
1	Valve Body	1	NR
2	Handhole Cover	1	NR
3	Handhole Cover Gasket	1	See (a)
4	Seat Ring	1	NR
5	Clapper	1	See (b)
6	Clapper Facing	1	See (a) or (b)
7	Clapper Washer	1	See (b)
8	Lock Nut, 2-1/2 Inch Valve	1	See (b)
	Self-Locking Hex Cap Screw, 4, 6, & 8 Inch Valves	1	See (b)
9	Clapper Hinge Pin	1	See (b)
10	Clapper Hinge Pin Bushing, 2-1/2 Inch Valve	2	NR
	4, 6, & 8 Inch Valves	4	NR
11	Clapper Spring	1	See (b)

VALVE PARTS

NO.	DESCRIPTION	QTY.	REF.
12	Handhole Cover Hex Bolt, 2-1/2 Inch Valve, 1/2-13 UNC-2A x 1-1/4" Long	4	CH
	4 Inch Valve, 1/2-13 UNC-2A x 1-3/4" Long	4	CH
	6 Inch Valve, 1/2-13 UNC-2A x 1-3/4" Long	6	CH
	8 Inch Valve, 3/4-10 UNC-2A x 2" Long	6	CH
13	Clapper Hinge Pin Square Head Pipe Plug, 3/8" NPT, 4, 6, & 8 Inch Valves only	1	CH

REPLACEMENT PARTS

NO.	DESCRIPTION	P/N
(a)	Repair Parts Kit, Includes 3 & 6	
	2-1/2 Inch Valve	92-200-1-216
	4 Inch Valve	92-200-1-416
	6 Inch Valve	92-200-1-620
	8 Inch Valve	92-200-1-816
(b)	Clapper Assembly, Includes 5-9, 11	
	2-1/2 Inch Valve	92-200-1-218
	Includes 5-11	
	4 Inch Valve	92-200-1-423
	6 Inch Valve	92-200-1-623
	8 Inch Valve	92-200-1-823

NOTES:

1. F x F valve shown for reference; components for G x G and F x G valves are shared.
2. NR: Not Replaceable
3. CH: Common Hardware

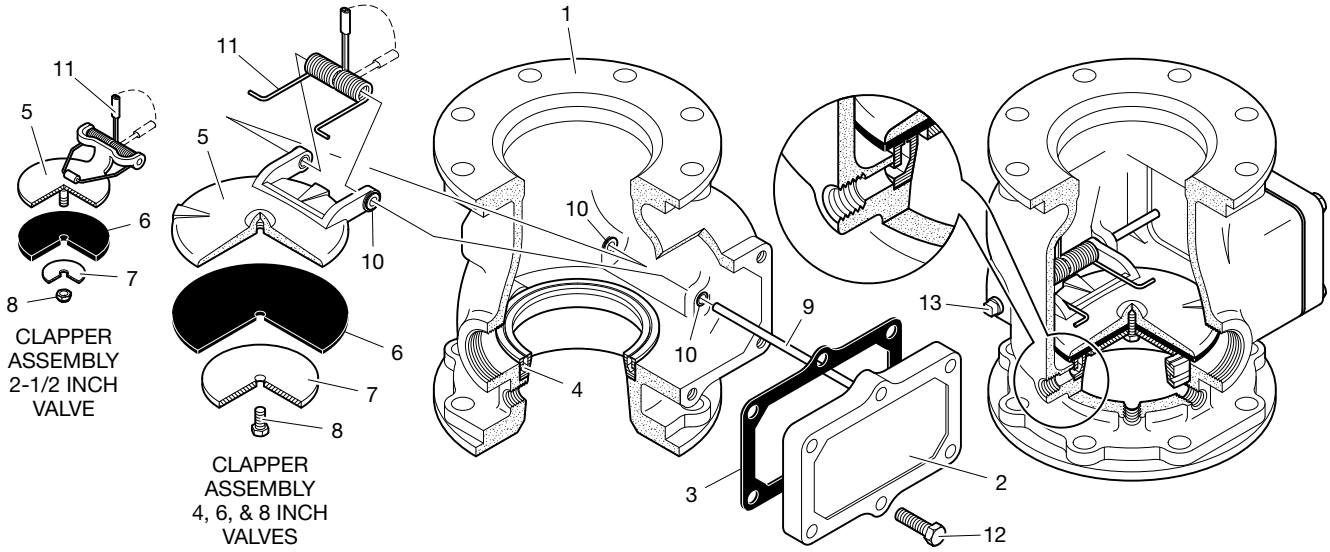

FIGURE 1
MODEL AV-1-300 ALARM CHECK VALVE ASSEMBLY

Nominal Valve Size Inches (DN)	Groove x Groove lb (kg)	Flange x Groove lb (kg)	Flange x Flange lb (kg)
2-1/2 (65)	22 (10,0)	28 (12,7)	N/A
4 (100)	38 (17,2)	47 (21,3)	57 (25,9)
6 (150)	58 (26,3)	70 (31,8)	84 (38,1)
8 (200)	102 (46,3)	120 (54,4)	149 (67,6)

TABLE A
MODEL AV-1-300 ALARM CHECK VALVE
AVAILABLE VALVE END CONNECTIONS AND VALVE WEIGHTS

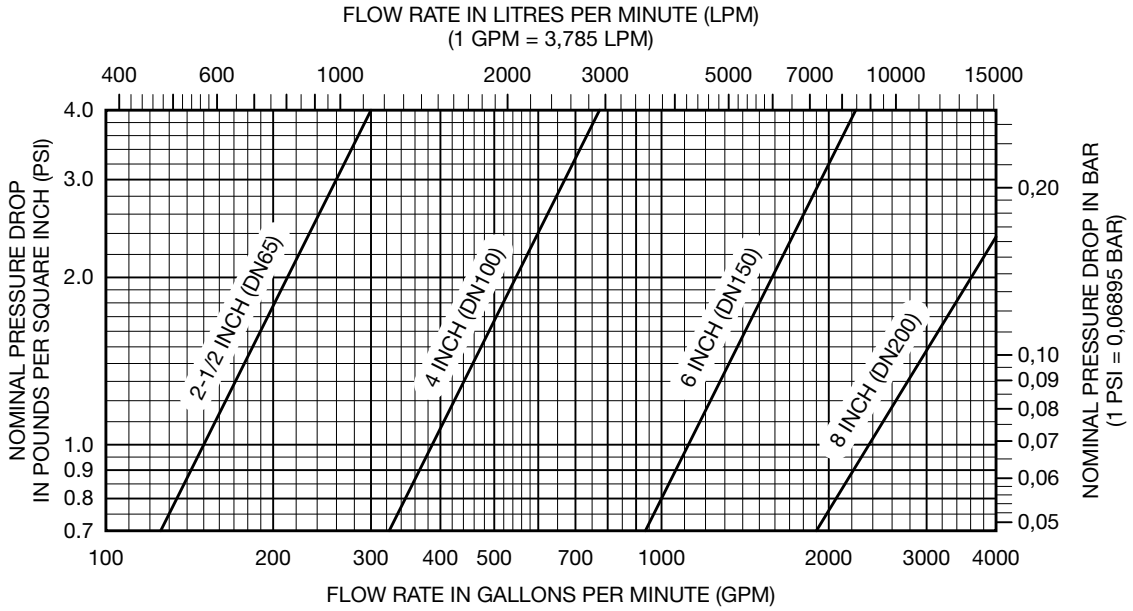

GRAPH A
MODEL AV-1-300 ALARM CHECK VALVE
NOMINAL PRESSURE LOSS VERSUS FLOW

Nominal Valve Size	Flange Drilling Specification														
	Nominal Dimensions in Inches and (mm)														
	ANSI B16.1 (Class 125) [1]			ISO 2084 (PN10) [2]			ISO 2084 (PN16) [3]			JIS B 2210 (10K)			AS 2129 (Table E)		
	Dim. A	Dim. B	Qty.	Dim. A	Dim. B	Qty.	Dim. A	Dim. B	Qty.	Dim. A	Dim. B	Qty.	Dim. A	Dim. B	Qty.
2-1/2 Inch (DN65)	5.50 (139,7)	0.75 (19,0)	4	USE ISO 2084 (PN16)			5.71 (145,0)	0.71 (18,0)	4	5.51 (140,0)	0.75 (19,0)	4	5.00 (127,0)	0.71 (18,0)	4
4 Inch (DN100)	7.50 (190,5)	0.75 (19,0)	8				7.09 (180,0)	0.71 (18,0)	8	6.89 (175,0)	0.75 (19,0)	8	7.00 (178,0)	0.71 (18,0)	8
6 Inch (DN150)	9.50 (241,3)	0.88 (22,2)	8				9.45 (240,0)	0.87 (22,0)	8	9.45 (240,0)	0.91 (23,0)	8	9.25 (235,0)	0.87 (22,0)	8
8 Inch (DN200)	11.75 (298,5)	0.88 (22,2)	8	11.61 (295,0)	0.87 (22,0)	8	11.61 (295,0)	0.87 (22,0)	12	11.42 (290,0)	0.91 (23,0)	12	11.50 (292,0)	0.87 (22,0)	8

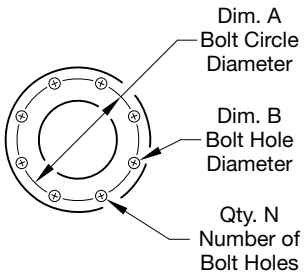

[1] Same drilling as for B16.5 (Class 150) and B16.42 (Class 250).
[2] Same drilling as for BS 4504 Section 3.2 (PN10) and DIN 2532 (PN10).
[3] Same drilling as for BS 4504 Section 3.2 (PN16) and DIN 2532 (PN16).

TABLE B
MODEL AV-1-300 ALARM CHECK VALVE
FLANGE DRILLING SPECIFICATIONS

Operation

When the fire protection system is initially pressurized, water flows into the system until the water supply and system pressure become equalized, and the torsion Spring closes the Waterway Clapper in the Alarm Check Valve. Once the pressures stabilize, the Alarm Check Valve is in service and the centrally located groove in the Seat Ring is sealed. Consequently, with the Alarm Check Valve set for service, there is no flow through the alarm port to the alarm devices (i.e., water motor alarm and/or pressure alarm switch).

When there is a steady flow of water into the sprinkler system due to a sprinkler operation, the Waterway Clapper opens as shown in Figure 2. Water is then permitted to flow into the centrally located groove in the Seat Ring and out through the alarm port towards the Restriction Assembly as shown in Figure 3. When the flow through the Inlet Restriction of the Restriction Assembly exceeds the flow through the Outlet Restriction, the Retard Chamber (where provided for systems with variable pressure), begins to fill.

Subsequently, the Water Motor Alarm and/or the pressure alarm switch will be actuated. The alarms will continue to be actuated as long as the Waterway Clapper remains open. Water in the alarm lines will automatically drain out through the 1/8 inch (3,2 mm) Drain Orifice in the Restriction Assembly (see Figure 3) when the Waterway Clapper closes (due to a stop in the flow of water into the sprinkler system).

For variable pressure systems, slow as well as small transient increases in water supply pressure may continue to build up in the system (via the Bypass Check Valve) without opening the Waterway Clapper.

A transient surge in supply pressure that is sufficient only to open the Waterway Clapper momentarily will not cause a false alarm, and a portion of the increase in pressure will be trapped within the system, thus reducing the possibility of another opening. Any water in the alarm line is automatically drained, further reducing the possibility of a false alarm due to a successive transient surge in supply pressure.

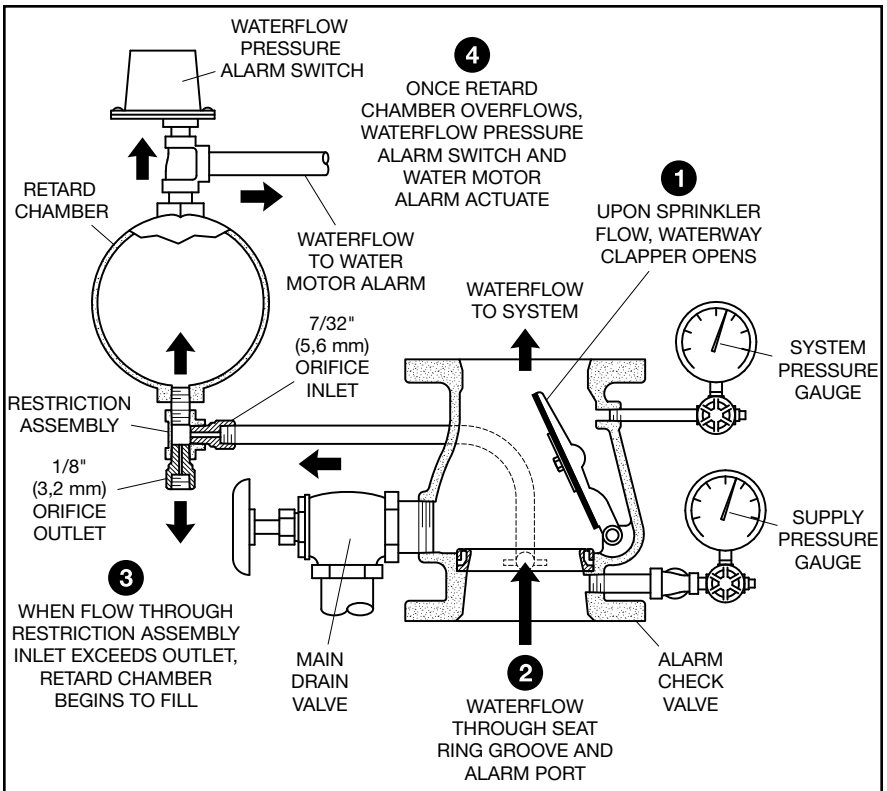

FIGURE 2
MODEL AV-1-300 ALARM CHECK VALVE OPERATION

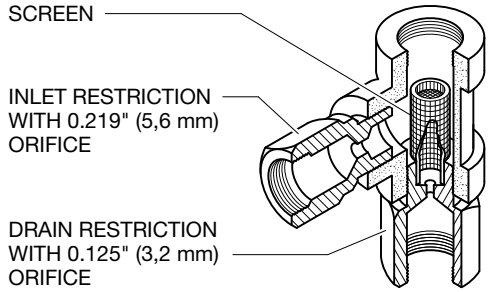

FIGURE 3
RESTRICTION ASSEMBLY
(PROVIDED WITH ALARM CHECK VALVE TRIM)

Design Criteria

In planning installation of the TYCO Model AV-1-300 Alarm Check Valves, consideration must be given to the disposal of the large quantities of water that may be associated with draining the system or performing a flow test.

Valves installed in the vertical position must have the flow going up. Valves installed in the horizontal position must be positioned so that the drain connection points down.

The sprinkler system designer must be aware that the configuration of the piping network and its tendency to trap pockets of air (such as in the case of a peaked-roof gridded system) can affect the performance of the alarm system. Although a slight amount of trapped air is desirable to prevent significant pressure increases due to thermally induced expansion of the water, a large quantity of trapped air in a system may result in the possibility of an intermittent alarm.

The possibility of an intermittent alarm condition is a consequence of the fact

that the flow out of the system through the test valve or a single sprinkler is very small relative to the flow that can be passed through the valve. This difference increases with valve size. If the system were free of trapped air, flow in would equal flow out and the Waterway Clapper would always stabilize at some open position (as needed to accommodate the required flow). With trapped air in the system, however, the Waterway Clapper first opens wider since the system initially demands greater flow until the air pockets are compressed (back to nearly the supply pressure), and then it will tend to return closer to the Seat Ring. If the volume of the air pockets is excessive, flow into the system can be momentarily reduced to nearly zero (once the air pockets are compressed) and the Waterway Clapper may close, causing flow to the alarms to be shutoff.

After the Waterway Clapper has closed, sufficient water must flow out of the system before the Waterway Clapper will again open. A repetition of the above described condition is termed an intermittent alarm.

Using a vent (which can also serve as an end-of-line Inspector's Test Connection) piped from the top of a cross main or end of a branch line at the point most remote from the alarm valve, and filling the system slowly in accordance with the steps described in the Setting Procedure section, can prevent an excessive amount of air from being trapped.

Installation

NOTICE

Proper operation of the TYCO Model AV-1-300 Alarm Check Valves depends upon the trim described in this data sheet installed in accordance with the following instructions. Failure to follow the appropriate trim installation instructions may prevent the device from functioning properly as well as void listings/approvals and the manufacturer's warranties.

The Alarm Check Valves must be installed in readily visible and accessible locations.

It is recommended that provision be made for viewing the alarm line drain water by locating the main drain outlet in a readily visible area.

Wet pipe fire protection systems must be maintained at a minimum temperature of 40°F (4°C).

Step 1. Trim the Alarm Check Valve in accordance with Figure 4, 5, or 6, as applicable. Apply pipe-thread sealant sparingly to male threads only.

Step 2. The Alarm Vent Trim illustrated in Figure 8 must be installed if a water motor alarm is not to be used.

Step 3. Plug unused alarm connections.

Step 4. Suitable provision must be made for disposal of alarm line and system drainage water. Drainage water must be directed so that it will not cause damage or result in dangerous conditions.

Step 5. The alarm line drain must be arranged so that there will be no danger of freezing.

Step 6. The check valve in the externally mounted bypass around the Waterway Clapper must be installed with its arrow pointed up, and the drain check valve must be installed with its arrow pointing towards the drain.

Step 7. It is recommended that a vent connection (which may also be used as an end-of-line Inspector's Test Connection), be piped from a cross main or branch line at the point most remote from the alarm valve. The vent line should be connected to the top of a cross main or to the end of a branch line and be located at the highest level of a multi-level installation.

The vent connection can be used to bleed-off excessive air from the system, and therefore, minimize the possibility of a false alarm due to a transient surge in supply pressure. The contraction/expansion associated with an excessive amount of trapped air could also cause the Waterway Clapper to cycle open and shut during an inspector's test or during a discharge by a single sprinkler.

Setting Procedure

Steps 1 through 11 are to be performed when initially setting the Model AV-1-300 Alarm Check Valve or after system operation due to a fire.

NOTICE

Filling the system with water will result in operation of the associated alarms. Consequently, notification must first be given to the owner and fire department, central station, or other signal station to which the alarms are connected.

Notify the proper authorities and all personnel who may be affected that an alarm test is to be performed.

After placing a fire protection system in service, notify the proper authorities and advise those responsible for monitoring proprietary and/or central station alarms.

Step 1. Open the 1/4 inch Gauge Test Valves for the Supply and System Pressure Gauges.

Step 2. Check to see that the Handhole Cover bolts are tight. If not, cross-tighten them.

Step 3. Close the Alarm Test Valve.

Step 4. Open the remote cross main or branch line vent connection. (Refer to Step 7 in the Installation section.)

Step 5. Slowly open the main control valve until the sound of flowing water just begins and then open the valve one more turn.

Step 6. Close the remote branchline vent connection after the discharge of aerated water ceases, and the outlet has flowed full for at least 15 seconds.

Step 7. Fully open the main control valve.

Step 8. Open the end-of-line Inspector's Test Connection (or Alarm Test Valve, if acceptable to the authority having jurisdiction) and verify that the system alarms operate.

Step 9. Close the end-of-line Inspector's Test Connection (or Alarm Test Valve).

Step 10. Verify that water ceases to flow from the alarm line drain. If water continues to flow, follow the corrective procedure described in the Care and Maintenance section.

The Restriction Assembly has a 1/8 in. (3,2 mm) diameter drain orifice. Sufficient time must be allowed for drainage of the Retard Chamber and the piping to the water motor alarm.

Step 11. After verification that the flow of water out of the alarm line drain has stopped, the alarm valve is set and is ready for service.

NO.	DESCRIPTION	QTY.	P/N
1	300 psi/ 2000 kPa Water Pressure Gauge	2	92-343-1-005
2	1/4" Gauge Test Valve	2	46-005-1-003
3	1/2" Swing Check Valve	2	46-049-1-007
4	1/2" Globe Valve	1	46-047-1-005
5	1/2" Y-Strainer	1	52-353-1-006
6	Restriction Assembly	1	92-210-2-005
7	1-1/4" Angle Valve	1	46-048-1-011
8	External By-Pass Tube	1	92-304-1-017
9	Alarm Test Tube	1	92-304-1-047
10	1/2" NPT x 1/2" Tube Connector	2	CH
11	1/2" NPT x 5/8" Tube Connector	2	CH
12	1/4" Plug	2	CH
13	1/2" Union	1	CH
14	1/4" 90° Elbow	1	CH
15	1/2" 90° Elbow	1	CH
16	1/2" Tee	2	CH

NO.	DESCRIPTION	QTY.	P/N
17	1/2" x 1/4" x 1/2" Tee	2	CH
18	1/2" x 1/2" x 3/4" Tee	1	CH
19	1-1/4" x 1-1/4" x 1/2" Tee	1	CH
20	1/4" x 1" Nipple	2	CH
21	1/4" x 2-1/2" Nipple	1	CH
22	1/2" x 1-1/2" Nipple	7	CH
23	1/2" x 2" Nipple	2	CH
24	1/2" x 2-1/2" Nipple	1	CH
25	1/2" x 3" Nipple	1	CH
26	1/2" x 4" Nipple	1	CH
27	1/2" x 6" Nipple	1	CH
28	1-1/4" x 2-1/2" Nipple	1	CH
29	1-1/4" x 3-1/2" Nipple	1	CH

NOTES:

1. All Fittings and Nipples are galvanized (Standard Order).
2. CH: Common Hardware.

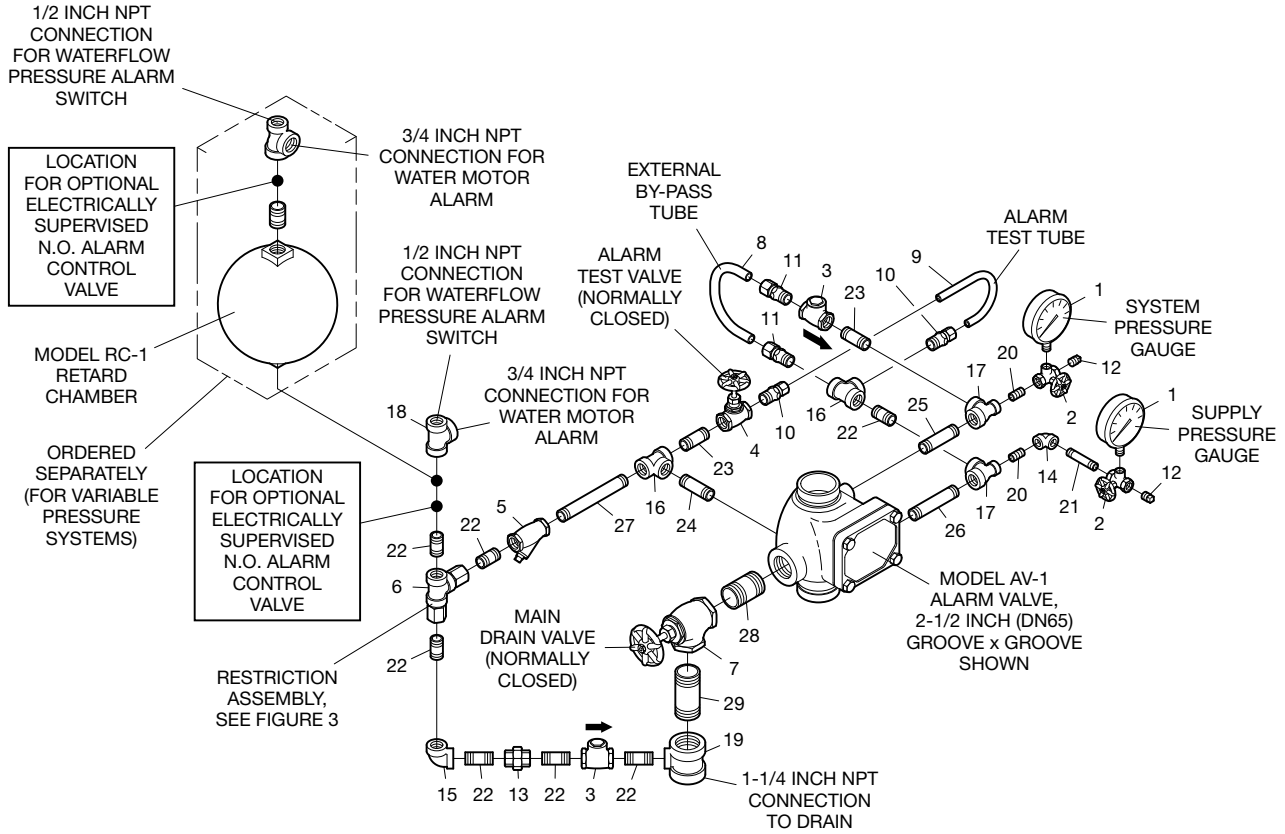

FIGURE 4 (1 OF 3)
VERTICAL CLOSED DRAIN TRIM — STANDARD ORDER
FOR 2-1/2 INCH (DN65) MODEL AV-1-300 ALARM CHECK VALVES (P/N 52-204-4-950)

NO.	DESCRIPTION	QTY.	P/N
1	300 psi/ 2000 kPa Water Pressure Gauge	2	92-343-1-005
2	1/4" Gauge Test Valve	2	46-005-1-003
3	1/2" Swing Check Valve	2	46-049-1-007
4	1/2" Globe Valve	1	46-047-1-005
5	1/2" Y-Strainer	1	52-353-1-006
6	Restriction Assembly	1	92-210-2-005
7	2" Angle Valve	1	46-048-1-012
8	1/4" Plug	2	CH
9	1/2" x 1/4" Reducing Bushing	1	CH
10	1/2" Union	3	CH
11	1/2" 90° Elbow	4	CH
12	1/2" 45° Elbow	1	CH
13	1/2" x 1/4" x 1/2" Tee	1	CH
14	1/2" x 1/2" x 3/4" Tee	1	CH
15	1/2" Tee	1	CH
16	2" x 2" x 1/2" Tee	1	CH
17	1/4" x Close Nipple	1	CH
18	1/4" x 4" Nipple	1	CH
19	1/2" x Close Nipple	4	CH
20	1/2" x 1-1/2" Nipple	5	CH
21	1/2" x 2" Nipple	2	CH
22	1/2" x 3" Nipple	2	CH
23	1/2" x 3-1/2" Nipple	1	CH
24	1/2" x 5" Nipple	1	CH
25	1/2" x 5-1/2" Nipple	1	CH
26	1/2" x 6-1/2" Nipple	1	CH
27	Select Nipple per Table	2	CH
28	Select Nipple per Table	2	CH
29	2" x 3" Nipple	2	CH

Nipple Number	Select Appropriate Nipple Sizes per AV-1 Alarm Check Valve Size	
	4 Inch (DN100)	6 Inch (DN150)
27	1/2" x 1-1/2"	1/2" x 2-1/2"
28	1/2" x 3-1/2"	1/2" x 4-1/2"

NOTES:
1. Install subassemblies in alphabetical order.
2. All Fittings and Nipples are galvanized (Standard Order).
3. CH: Common Hardware.

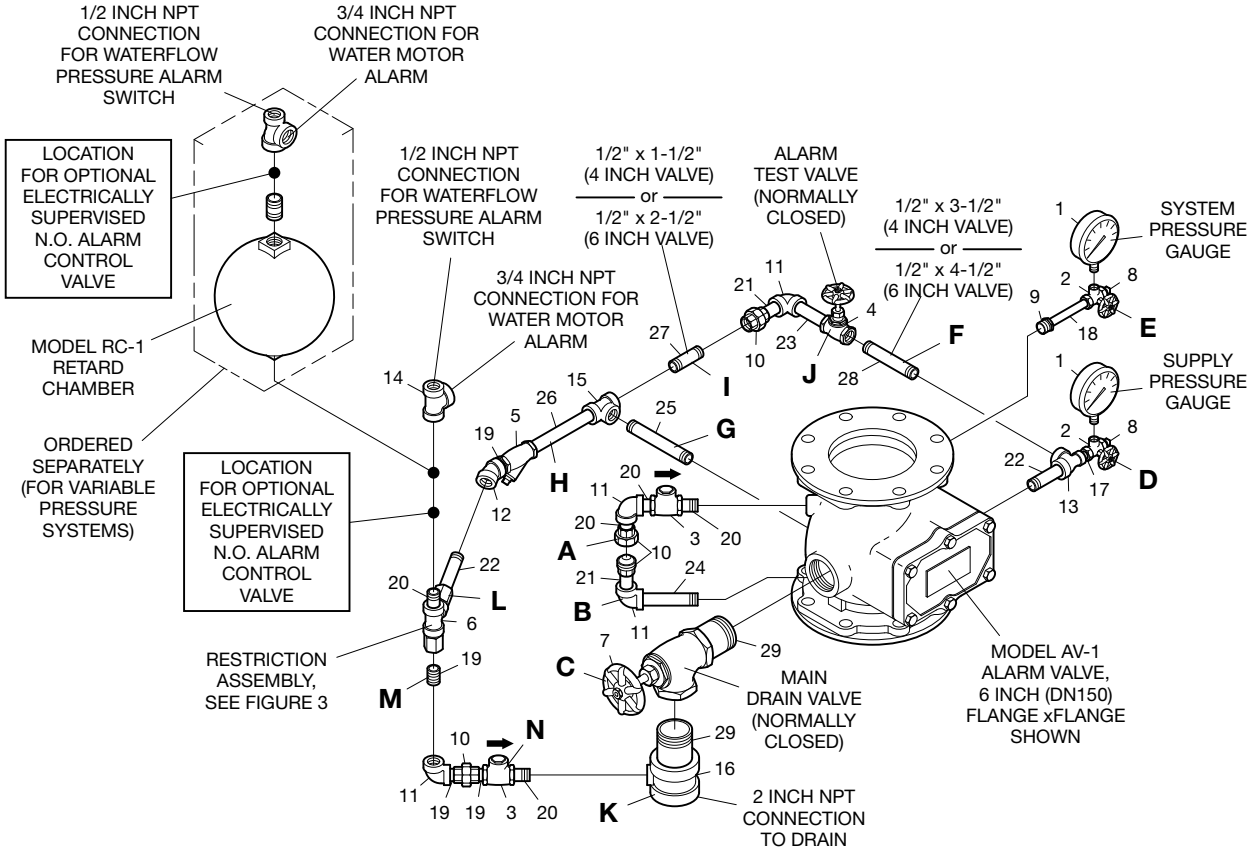

FIGURE 4 (2 OF 3)
VERTICAL CLOSED DRAIN TRIM — STANDARD ORDER — SEMI-PREASSEMBLED
FOR 4 & 6 INCH (DN100 & DN150) MODEL AV-1-300 ALARM CHECK VALVES (P/N 52-204-4-951)

NO.	DESCRIPTION	QTY.	P/N
1	300 psi/ 2000 kPa Water Pressure Gauge	2	92-343-1-005
2	1/4" Gauge Test Valve	2	46-005-1-003
3	1/2" Swing Check Valve	1	46-049-1-007
4	3/4" Swing Check Valve	1	46-049-1-008
5	1/2" Globe Valve	1	46-047-1-005
6	1/2" Y-Strainer	1	52-353-1-006
7	Restriction Assembly	1	92-210-2-005
8	2" Angle Valve	1	46-048-1-012
9	1/4" Plug	2	CH
10	1/2" Union	2	CH
11	3/4" Union	1	CH
12	1/2" 90° Elbow	2	CH
13	1/2" 45° Elbow	1	CH
14	1/2" Tee	1	CH
15	1/2" x 1/2" x 3/4" Tee	1	CH
16	3/4" x 1/4" x 3/4" Tee	2	CH
17	3/4" x 3/4" x 1/2" Tee	1	CH
18	2" x 2" x 1/2" Tee	1	CH
19	1/4" x 1-1/2" Nipple	2	CH
20	1/2" x Close Nipple	3	CH
21	1/2" x 1-1/2" Nipple	3	CH

NO.	DESCRIPTION	QTY.	P/N
22	1/2" x 2" Nipple	1	CH
23	1/2" x 3" Nipple	1	CH
24	1/2" x 3-1/2" Nipple	2	CH
25	1/2" x 4-1/2" Nipple	2	CH
26	1/2" x 6-1/2" Nipple	1	CH
27	3/4" x Close Nipple	2	CH
28	3/4" x 1-1/2" Nipple	1	CH
29	3/4" x 2-1/2" Nipple	1	CH
30	3/4" x 3" Nipple	1	CH
31	3/4" x 4-1/2" Nipple	1	CH
32	2" x 3" Nipple	1	CH
33	2" x 3-1/2" Nipple	1	CH

NOTES:
1. Install subassemblies in alphabetical order.
2. All Fittings and Nipples are galvanized (Standard Order).
3. CH: Common Hardware.

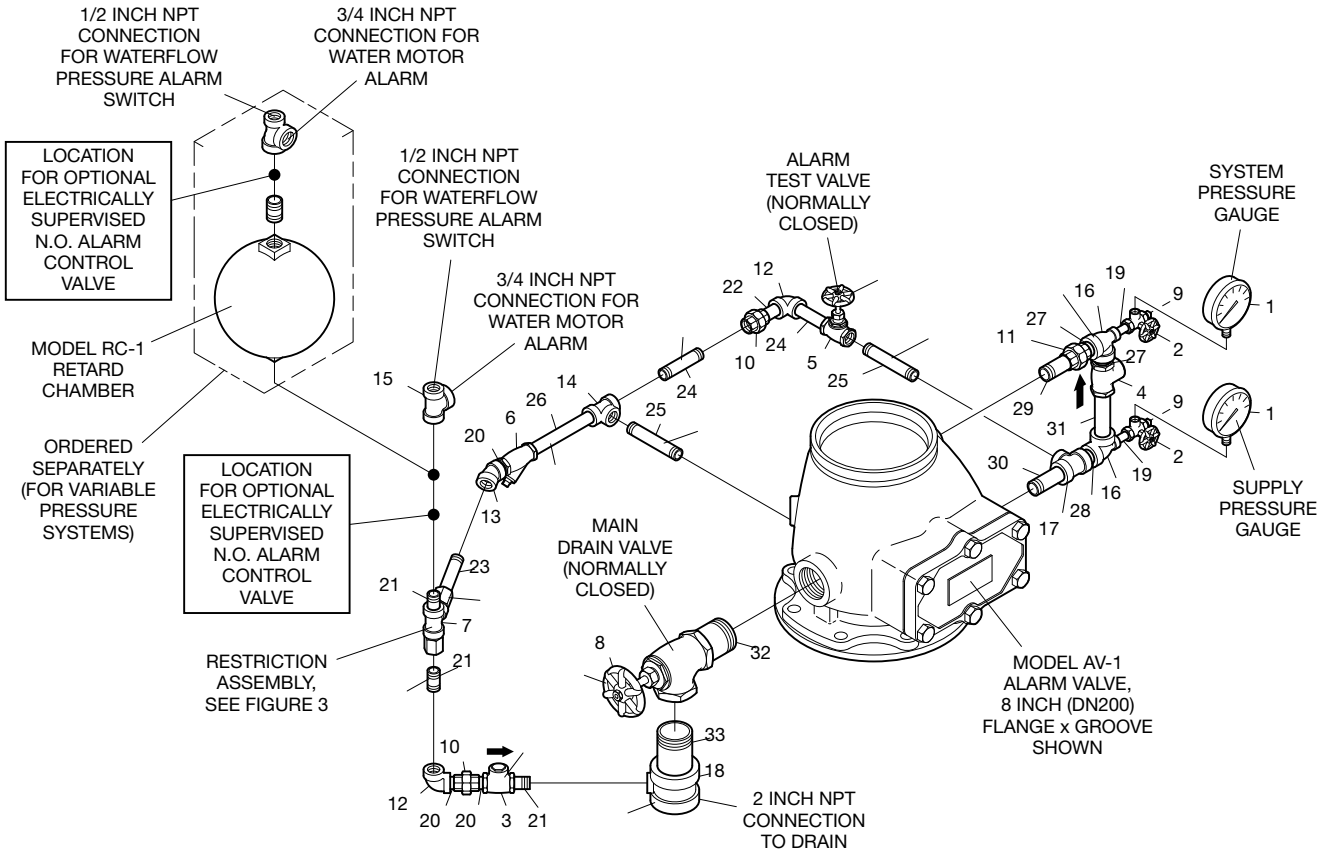

FIGURE 4 (3 OF 3)
VERTICAL CLOSED DRAIN TRIM — STANDARD ORDER — SEMI-PREASSEMBLED FOR 8 INCH (DN200) MODEL AV-1-300 ALARM CHECK VALVES (P/N 52-204-4-952)

NO.	DESCRIPTION	QTY.	P/N
1	300 psi/ 2000 kPa Water Pressure Gauge	2	92-343-1-005
2	1/4" Gauge Test Valve	2	46-005-1-003
3	1/2" Swing Check Valve	1	46-049-1-007
4	1/2" Globe Valve	1	46-047-1-005
5	1/2" Y-Strainer	1	52-353-1-006
6	Restriction Assembly	1	92-210-2-005
7	1-1/4" Angle Valve	1	46-048-1-011
8	External By-Pass Tube	1	92-304-1-017
9	Alarm Test Tube	1	92-304-1-047
10	1/2" NPT x 1/2" Tube Connector	2	CH
11	1/2" NPT x 5/8" Tube Connector	2	CH
12	Support Bar	1	92-304-1-014
13	Jam Nut	1	92-640-1-037
14	PVC Nipple	1	92-640-1-009
15	Support Bracket	1	92-343-1-006
16	Drip Funnel	1	92-343-1-007
17	1/4" Plug	2	CH

NO.	DESCRIPTION	QTY.	P/N
18	1/4" 90° Elbow	1	CH
19	1/2" Tee	2	CH
20	1/2" x 1/4" x 1/2" Tee	2	CH
21	1/2" x 1/2" x 3/4" Tee	1	CH
22	1-1/4" x 1-1/4" x 1/2" Tee	2	CH
23	1/4" x 1" Nipple	2	CH
24	1/4" x 2-1/2" Nipple	1	CH
25	1/2" x 1-1/2" Nipple	3	CH
26	1/2" x 2" Nipple	2	CH
27	1/2" x 2-1/2" Nipple	1	CH
28	1/2" x 3" Nipple	1	CH
29	1/2" x 4" Nipple	1	CH
30	1/2" x 5" Nipple	1	CH
31	1-1/4" x 2-1/2" Nipple	2	CH
32	1-1/4" x 8-1/2" Nipple	1	CH

NOTES:
1. All Fittings and Nipples are galvanized (Standard Order).
2. CH: Common Hardware.

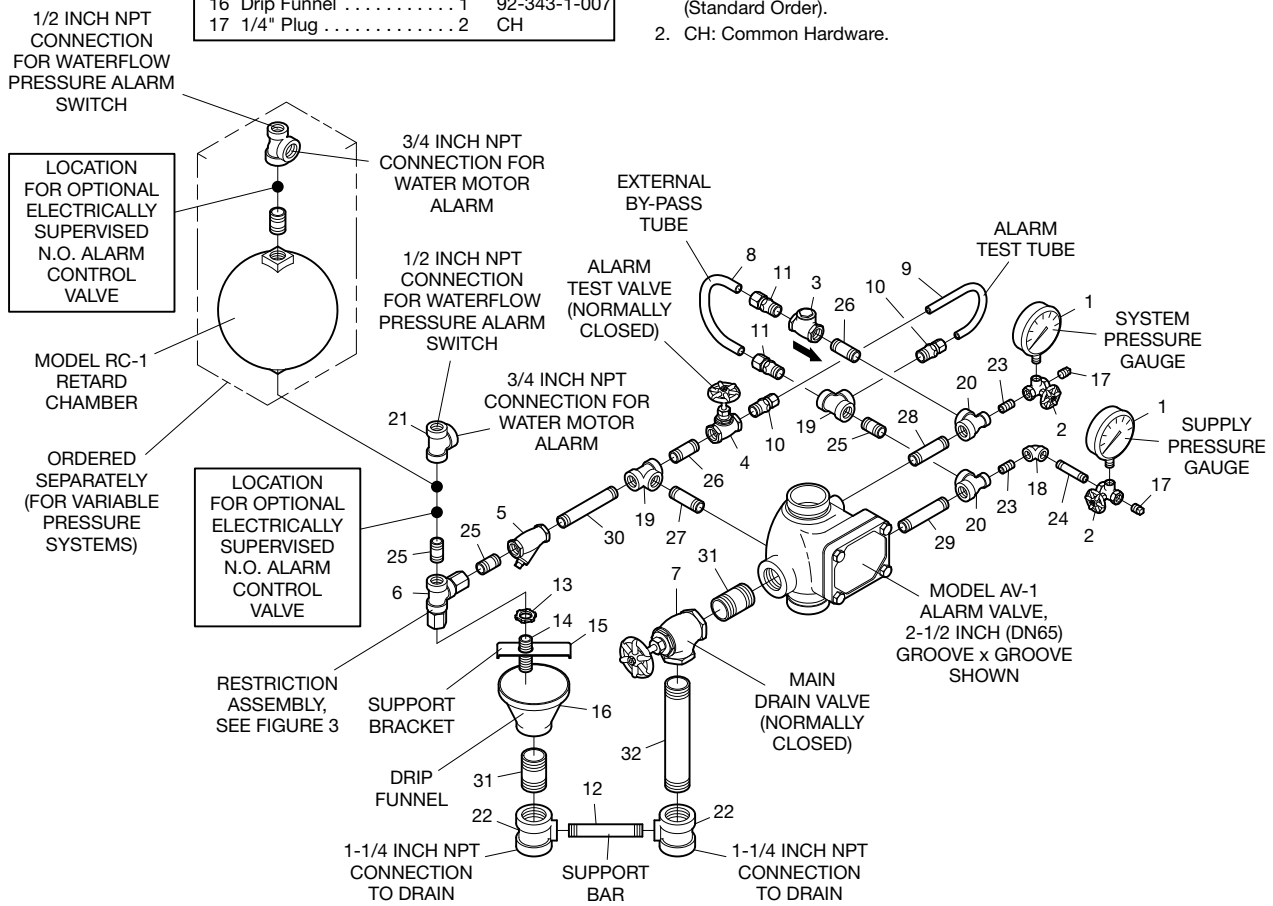

FIGURE 5 (1 OF 3)
VERTICAL OPEN DRAIN TRIM — SPECIAL ORDER
FOR 2-1/2 INCH (DN65) MODEL AV-1-300 ALARM CHECK VALVES (P/N 52-204-4-053)

NO.	DESCRIPTION	QTY.	P/N
1	300 psi/ 2000 kPa Water Pressure Gauge	2	92-343-1-005
2	1/4" Gauge Test Valve	2	46-005-1-003
3	1/2" Swing Check Valve	1	46-049-1-007
4	1/2" Globe Valve	1	46-047-1-005
5	1/2" Y-Strainer	1	52-353-1-006
6	Restriction Assembly	1	92-210-2-005
7	2" Angle Valve	1	46-048-1-012
8	Drip Funnel Connector	1	92-211-1-005
9	Drip Funnel Bracket	1	92-211-1-003
10	Drip Funnel	1	92-343-1-007
11	1/4" Plug	2	CH
12	1/2" x 1/4" Reducing Bushing	1	CH
13	1/2" Union	2	CH
14	1/2" 90° Elbow	3	CH
15	1/2" 45° Elbow	1	CH
16	1/2" x 1/4" x 1/2" Tee	1	CH
17	1/2" x 1/2" x 3/4" Tee	1	CH
18	1/2" Tee	2	CH
19	1/4" x Close Nipple	1	CH
20	1/4" x 4" Nipple	1	CH
21	1/2" x Close Nipple	3	CH

NO.	DESCRIPTION	QTY.	P/N
22	1/2" x 1-1/2" Nipple	4	CH
23	1/2" x 2" Nipple	2	CH
24	1/2" x 3" Nipple	1	CH
25	1/2" x 3-1/2" Nipple	1	CH
26	1/2" x 5" Nipple	1	CH
27	1/2" x 5-1/2" Nipple	1	CH
28	1/2" x 6-1/2" Nipple	1	CH
29	Select Nipple per Table	2	CH
30	Select Nipple per Table	2	CH
31	2" x 3" Nipple	1	CH

Nipple Number	Select Appropriate Nipple Sizes per AV-1 Alarm Check Valve Size	
	4 Inch (DN100)	6 Inch (DN150)
29	1/2" x 1-1/2"	1/2" x 2-1/2"
30	1/2" x 3-1/2"	1/2" x 4-1/2"

NOTES:
1. Install subassemblies in alphabetical order.
2. All Fittings and Nipples are galvanized (Standard Order).
3. CH: Common Hardware.

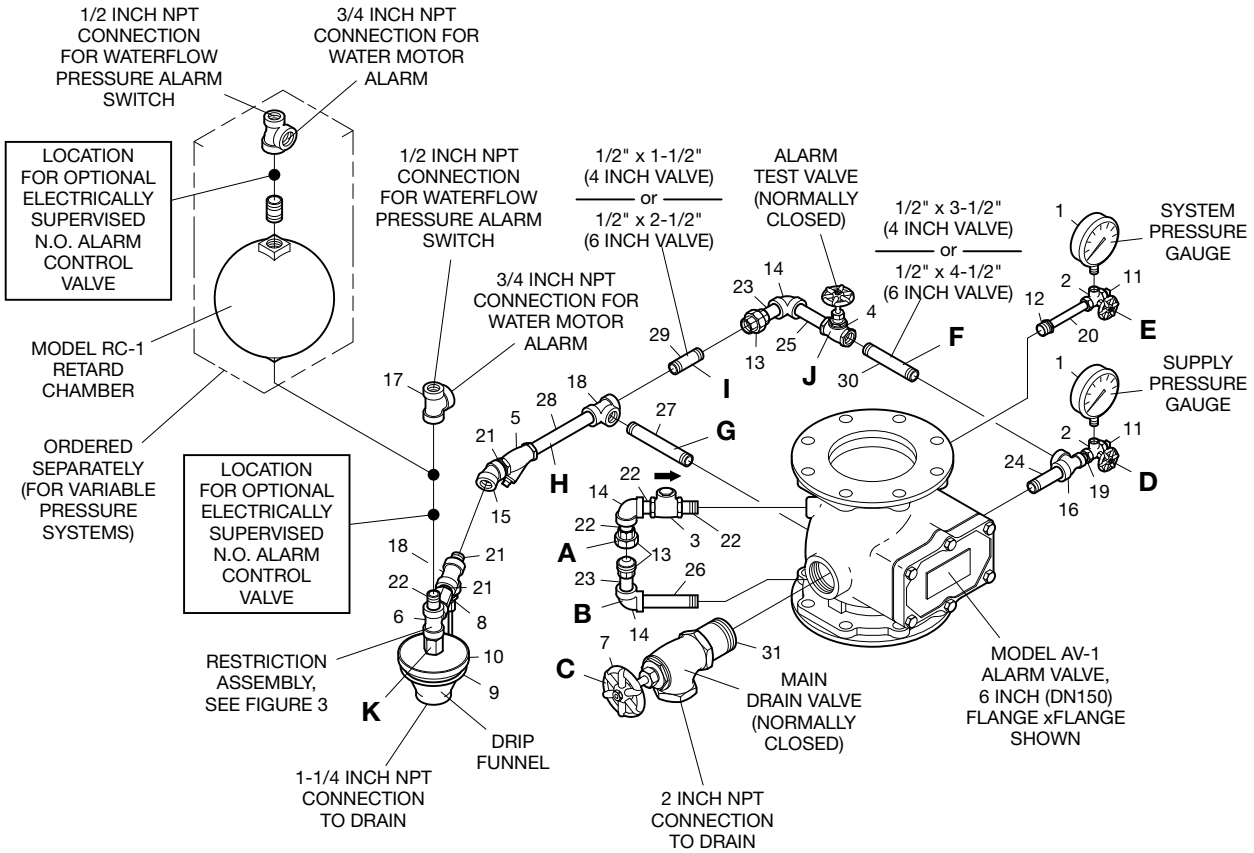

FIGURE 5 (2 OF 3)
VERTICAL OPEN DRAIN TRIM — SPECIAL ORDER — SEMI-PREASSEMBLED
FOR 4 & 6 INCH (DN100 & DN150) MODEL AV-1-300 ALARM CHECK VALVES (P/N 52-204-4-954)

NO.	DESCRIPTION	QTY.	P/N
1	300 psi/ 2000 kPa Water Pressure Gauge	2	92-343-1-005
2	1/4" Gauge Test Valve	2	46-005-1-003
3	3/4" Swing Check Valve	1	46-049-1-008
4	1/2" Globe Valve	1	46-047-1-005
5	1/2" Y-Strainer	1	52-353-1-006
6	Restriction Assembly	1	92-210-2-005
7	2" Angle Valve	1	46-048-1-012
8	Drip Funnel Connector	1	92-211-1-005
9	Drip Funnel Bracket	1	92-211-1-003
10	Drip Funnel	1	92-343-1-007
11	1/4" Plug	2	CH
12	1/2" Union	1	CH
13	3/4" Union	1	CH
14	1/2" 90° Elbow	1	CH
15	1/2" 45° Elbow	1	CH
16	1/2" Tee	2	CH
17	1/2" x 1/2" x 3/4" Tee	1	CH
18	3/4" x 1/4" x 3/4" Tee	2	CH
19	3/4" x 3/4" x 1/2" Tee	1	CH

NO.	DESCRIPTION	QTY.	P/N
20	1/4" x 1-1/2" Nipple	2	CH
21	1/2" x Close Nipple	3	CH
22	1/2" x 1-1/2" Nipple	1	CH
23	1/2" x 2" Nipple	1	CH
24	1/2" x 3-1/2" Nipple	2	CH
25	1/2" x 4-1/2" Nipple	2	CH
26	1/2" x 6-1/2" Nipple	1	CH
27	3/4" x Close Nipple	2	CH
28	3/4" x 1-1/2" Nipple	1	CH
29	3/4" x 2-1/2" Nipple	1	CH
30	3/4" x 3" Nipple	1	CH
31	3/4" x 4-1/2" Nipple	1	CH
32	2" x 3" Nipple	1	CH

NOTES:

1. Install subassemblies in alphabetical order.
2. All Fittings and Nipples are galvanized (Standard Order).
3. CH: Common Hardware.

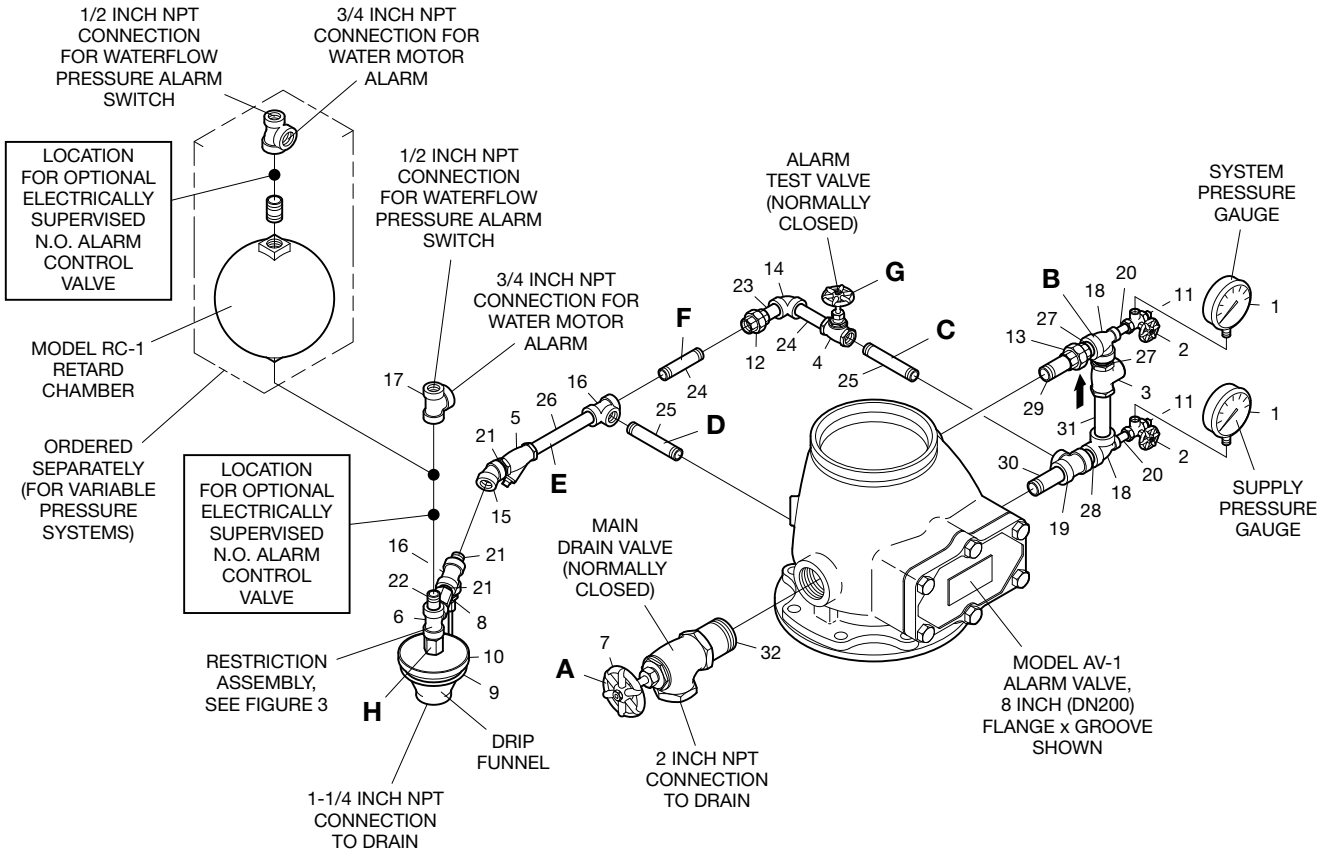

FIGURE 5 (3 OF 3)
VERTICAL OPEN DRAIN TRIM — SPECIAL ORDER — SEMI-PREASSEMBLED
FOR 8 INCH (DN200) MODEL AV-1-300 ALARM CHECK VALVES (P/N 52-204-4-955)

NO.	DESCRIPTION	QTY.	P/N
1	300 psi/ 2000 kPa Water Pressure Gauge	2	92-343-1-005
2	1/4" Gauge Test Valve	2	46-005-1-003
3	1/2" Swing Check Valve	2	46-049-1-007
4	1/2" Globe Valve	1	46-047-1-005
5	1/2" Y-Strainer	1	52-353-1-006
6	Restriction Assembly	1	92-210-2-005
7	2" Globe Valve	1	46-047-1-010
8	1/4" Plug	2	CH
9	1/2" Union	3	CH
10	1/2" 90° Elbow	5	CH
11	1/2" x 1/4" x 1/2" Tee	1	CH
12	1/2" x 1/2" x 3/4" Tee	1	CH
13	1/2" Tee	1	CH
14	2" x 2" x 1/2" Tee	1	CH
15	1/4" x Close Nipple	1	CH
16	1/4" x 4" Nipple	1	CH
17	1/2" x 1-1/2" Nipple	8	CH
18	1/2" x 2" Nipple	3	CH
19	1/2" x 3" Nipple	2	CH
20	1/2" x 3-1/2" Nipple	1	CH

NO.	DESCRIPTION	QTY.	P/N
21	1/2" x 5" Nipple	1	CH
22	1/2" x 5-1/2" Nipple	1	CH
23	Select Nipple per Table	2	CH
24	Select Nipple per Table	2	CH
25	Select Nipple per Table	2	CH
26	2" x 2-1/2" Nipple	2	CH

Nipple Number	Select Appropriate Nipple Sizes per AV-1 Alarm Check Valve Size	
	4 Inch (DN100)	6 Inch (DN150)
23	1/2" x 1-1/2"	1/2" x 2-1/2"
24	1/2" x 3-1/2"	1/2" x 4-1/2"
25	1/2" x 7"	1/2" x 8"

NOTES:
1. All Fittings and Nipples are galvanized (Standard Order).
2. CH: Common Hardware.

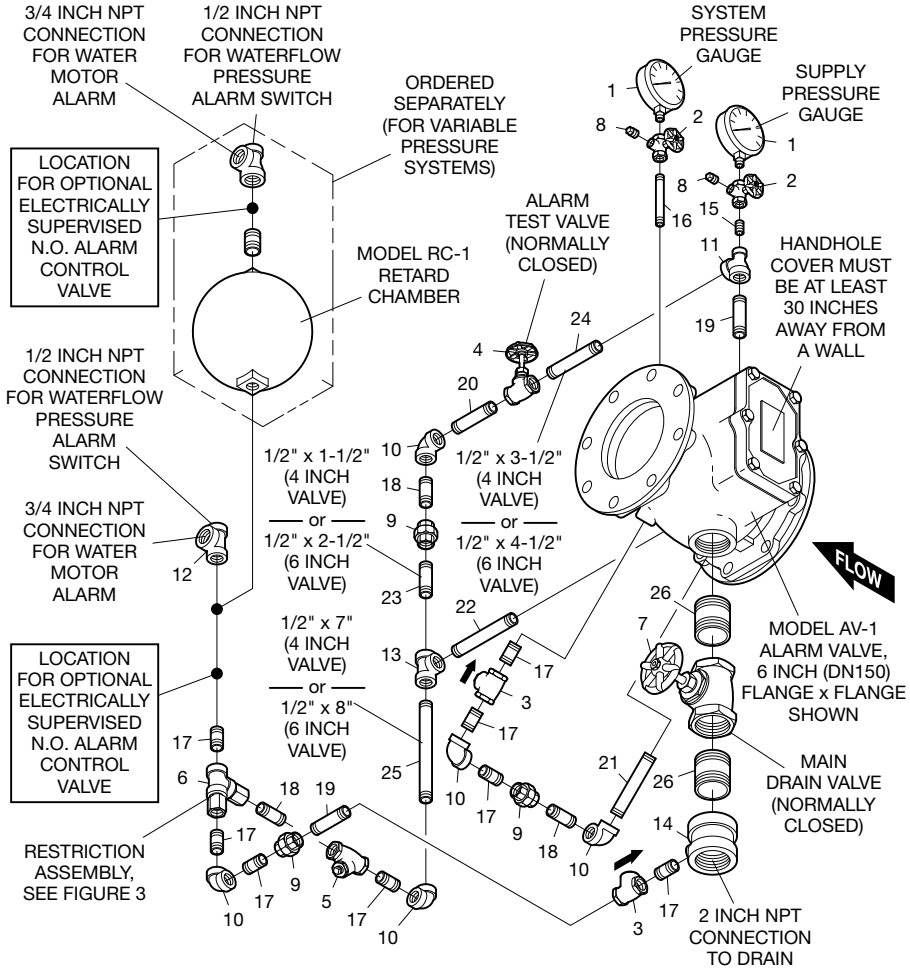

FIGURE 6 (1 OF 2)
HORIZONTAL CLOSED DRAIN TRIM — SPECIAL ORDER
FOR 4 & 6 INCH (DN100 & DN150) MODEL AV-1-300 ALARM CHECK VALVES (P/N 52-204-4-057)

NO.	DESCRIPTION	QTY.	P/N
1	300 psi/ 2000 kPa Water Pressure Gauge	2	92-343-1-005
2	1/4" Gauge Test Valve	2	46-005-1-003
3	1/2" Swing Check Valve	1	46-049-1-007
4	3/4" Swing Check Valve	1	46-049-1-008
5	1/2" Globe Valve	1	46-047-1-005
6	1/2" Y-Strainer	1	52-353-1-006
7	Restriction Assembly	1	92-210-2-005
8	2" Globe Valve	1	46-047-1-010
9	1/4" Plug	2	CH
10	1/2" Union	2	CH
11	3/4" Union	1	CH
12	1/2" 90° Elbow	3	CH
13	1/2" Tee	1	CH
14	1/2" x 1/2" x 3/4" Tee	1	CH
15	3/4" x 1/4" x 3/4" Tee	2	CH
16	3/4" x 3/4" x 1/2" Tee	1	CH
17	2" x 2" x 1/2" Tee	1	CH
18	1/4" x 1-1/2" Nipple	2	CH
19	1/2" x 1-1/2" Nipple	5	CH
20	1/2" x 2" Nipple	2	CH
21	1/2" x 3" Nipple	1	CH

NO.	DESCRIPTION	QTY.	P/N
22	1/2" x 3-1/2" Nipple	2	CH
23	1/2" x 4-1/2" Nipple	2	CH
24	1/2" x 9-1/2" Nipple	1	CH
25	3/4" x Close Nipple	2	CH
26	3/4" x 1-1/2" Nipple	1	CH
27	3/4" x 2-1/2" Nipple	1	CH
28	3/4" x 3" Nipple	1	CH
29	3/4" x 4-1/2" Nipple	1	CH
30	2" x 2-1/2" Nipple	1	CH
31	2" x 3" Nipple	1	CH

NOTES:

1. All Fittings and Nipples are galvanized (Standard Order).
2. CH: Common Hardware.

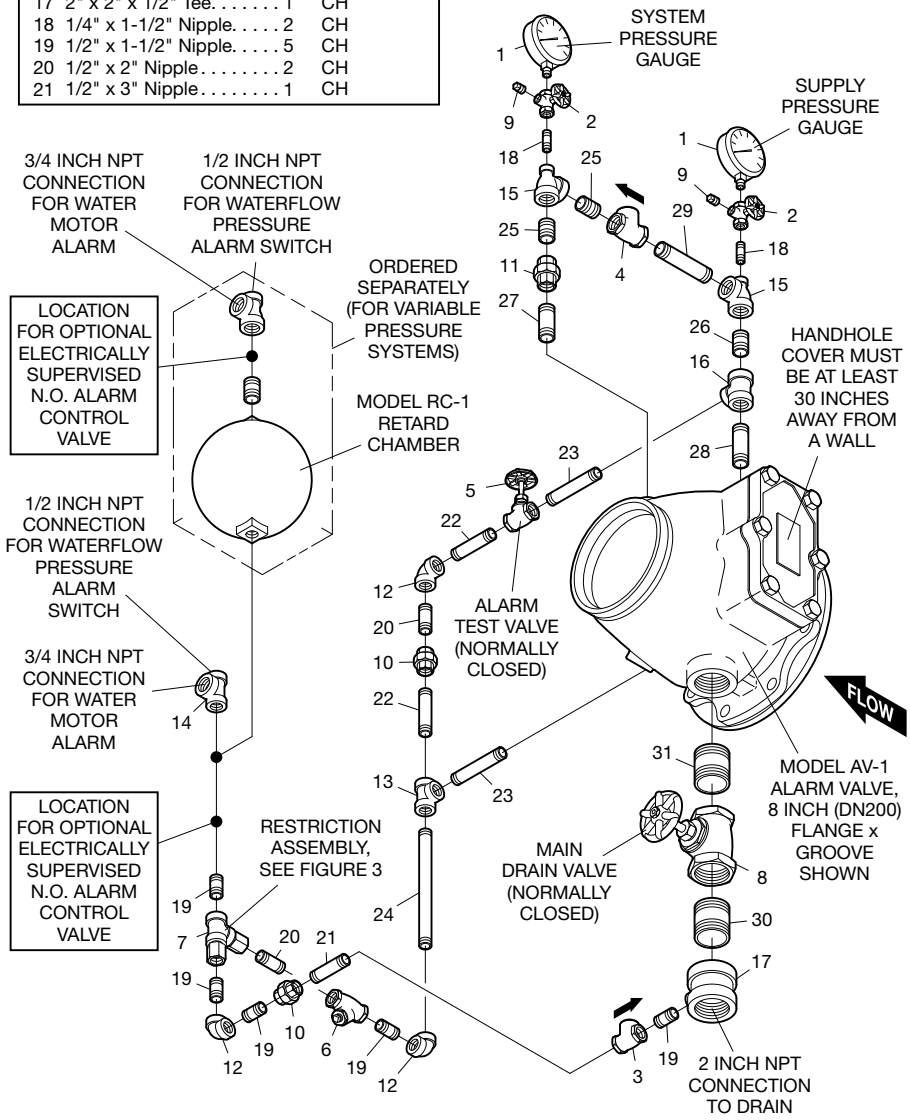

FIGURE 6 (2 OF 2)
HORIZONTAL CLOSED DRAIN TRIM — SPECIAL ORDER
FOR 8 INCH (DN200) MODEL AV-1-300 ALARM CHECK VALVES (P/N 52-204-4-058)

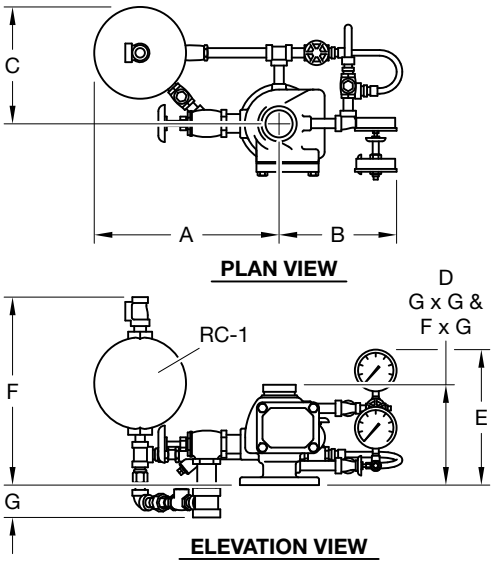

Vertical Closed Drain Trim		
Dimension	Dimensions in Inches and (mm)	
	With RC-1	Without RC-1
A	16-1/2 (419)	13-1/2 (343)
B	10-1/2 (267)	10-1/2 (267)
C	10-1/2 (267)	10 (254)
D	8-7/8 (225)	8-7/8 (225)
E	12-1/4 (311)	12-1/4 (311)
F	16-1/2 (419)	N/A
G	3 (75)	3 (75)

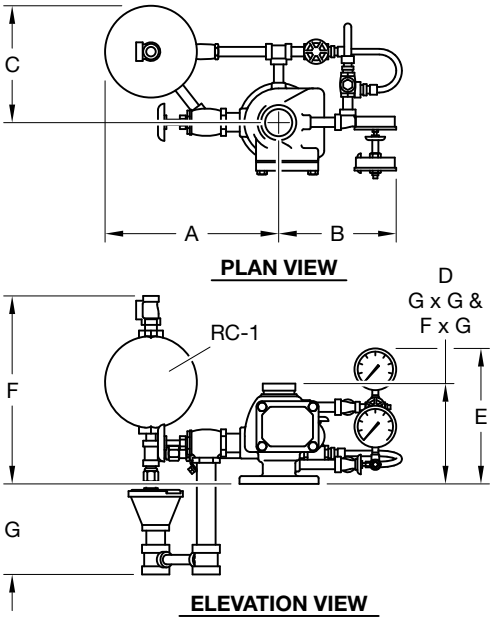

Vertical Open Drain Trim		
Dimension	Dimensions in Inches and (mm)	
	With RC-1	Without RC-1
A	15-1/2 (394)	13-1/2 (343)
B	10-1/2 (267)	10-1/2 (267)
C	10-1/2 (267)	10 (254)
D	8-7/8 (225)	8-7/8 (225)
E	12-1/4 (311)	12-1/4 (311)
F	16-1/2 (419)	N/A
G	3 (75)	3 (75)

FIGURE 7 (1 OF 3)
INSTALLATION DIMENSIONS
FOR 2-1/2 INCH (DN65) MODEL AV-1-300 ALARM CHECK VALVES

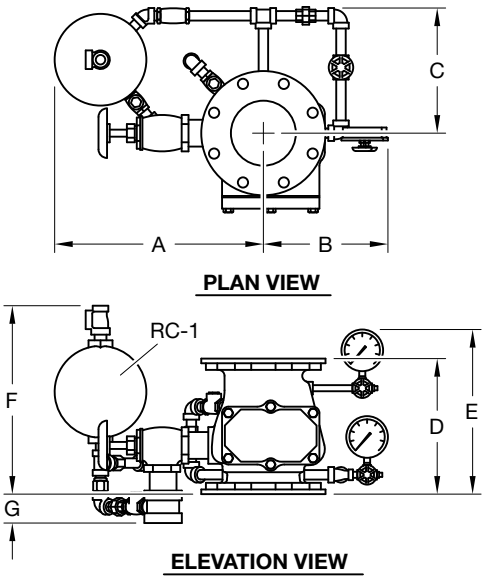

Vertical Closed Drain Trim				
Dimension	Dimensions in Inches and (mm)			
	With RC-1		Without RC-1	
	4 Inch (DN100)	6 Inch (DN150)	4 Inch (DN100)	6 Inch (DN150)
A	19 (483)	19 (483)	19 (483)	19 (483)
B	10-1/2 (267)	11-1/4 (286)	10-1/2 (267)	11-1/4 (286)
C	10-1/2 (267)	11-1/2 (292)	10-1/2 (267)	11-1/2 (292)
D (G x G)	10-1/4 (260)	12-1/4 (311)	10-1/4 (260)	12-1/4 (311)
D (F x F)	10 (254)	12 (305)	10 (254)	12 (305)
D (F x G)	10 (254)	12 (305)	10 (254)	12 (305)
E	12-1/2 (318)	15 (381)	12-1/2 (318)	15 (381)
F	15-1/2 (394)	15-1/2 (394)	11-1/2 (292)	11-1/2 (292)
G	3 (75)	2-3/4 (70)	3 (75)	2-3/4 (70)

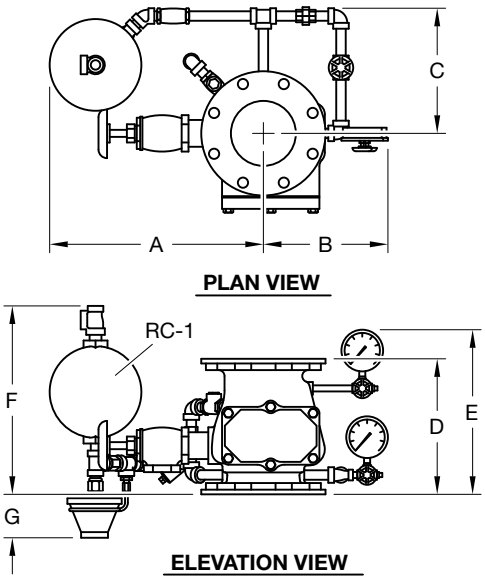

Vertical Open Drain Trim				
Dimension	Dimensions in Inches and (mm)			
	With RC-1		Without RC-1	
	4 Inch (DN100)	6 Inch (DN150)	4 Inch (DN100)	6 Inch (DN150)
A	19 (483)	19 (483)	19 (483)	19 (483)
B	10-1/2 (267)	11-1/4 (286)	10-1/2 (267)	11-1/4 (286)
C	10-1/2 (267)	11-1/2 (292)	10-1/2 (267)	11-1/2 (292)
D (G x G)	10-1/4 (260)	12-1/4 (311)	10-1/4 (260)	12-1/4 (311)
D (F x F)	10 (254)	12 (305)	10 (254)	12 (305)
D (F x G)	10 (254)	12 (305)	10 (254)	12 (305)
E	12-1/2 (318)	15 (381)	12-1/2 (318)	15 (381)
F	15-1/2 (394)	15-1/2 (394)	11-1/2 (292)	11-1/2 (292)
G	3 (75)	2-3/4 (70)	3 (75)	2-3/4 (70)

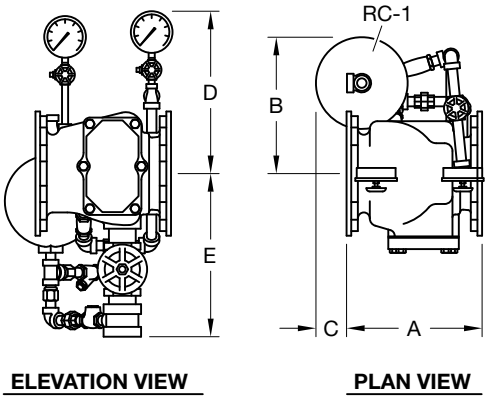

Horizontal Closed Drain Trim				
Dimension	Dimensions in Inches and (mm)			
	With RC-1		Without RC-1	
	4 Inch (DN100)	6 Inch (DN150)	4 Inch (DN100)	6 Inch (DN150)
A (G x G)	10-1/4 (260)	12-1/4 (311)	10-1/4 (260)	12-1/4 (311)
A (F x F)	10 (254)	12 (305)	10 (254)	12 (305)
A (F x G)	10 (254)	12 (305)	10 (254)	12 (305)
B	15 (381)	15 (381)	10-1/2 (267)	11-1/2 (292)
C	3-1/4 (83)	3-1/4 (83)	3-1/4 (83)	3-1/4 (83)
D	14 (356)	15 (381)	14 (356)	15 (381)
E	13-3/4 (349)	14-3/4 (375)	13-3/4 (349)	14-3/4 (375)

FIGURE 7 (2 OF 3)
INSTALLATION DIMENSIONS
FOR 4 & 6 INCH (DN100 & DN150) MODEL AV-1-300 ALARM CHECK VALVES

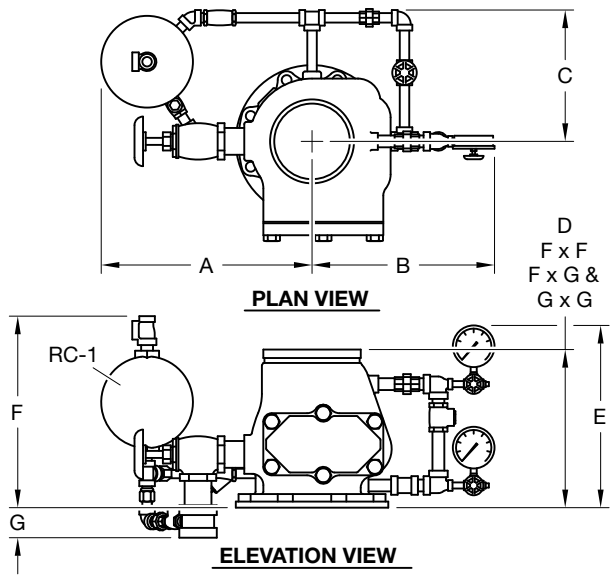

Vertical Closed Drain Trim		
Dimension	Dimensions in Inches and (mm)	
	With RC-1	Without RC-1
A	18-1/2 (470)	15-3/4 (400)
B	16-1/8 (410)	16-1/8 (410)
C	12 (305)	12 (305)
D	14 (356)	14 (356)
E	16-1/2 (419)	16-1/2 (419)
F	15-1/2 (394)	N/A
G	2-1/2 (64)	2-1/2 (64)

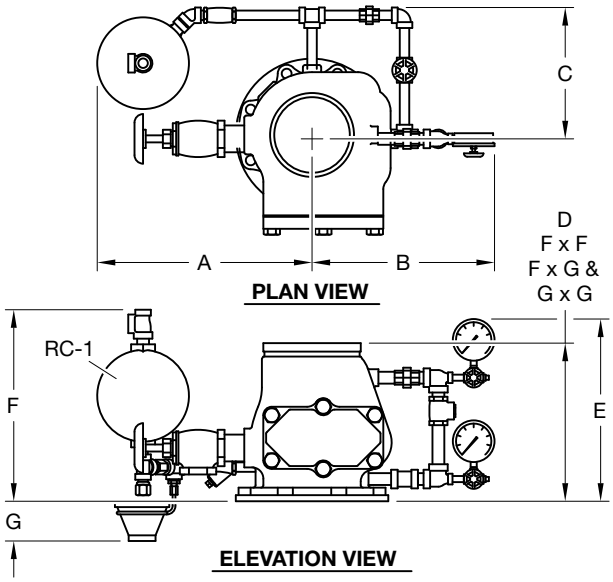

Vertical Open Drain Trim		
Dimension	Dimensions in Inches and (mm)	
	With RC-1	Without RC-1
A	18-1/2 (470)	15-3/4 (400)
B	16-1/8 (410)	16-1/8 (410)
C	12 (305)	12 (305)
D	14 (356)	14 (356)
E	16-1/2 (419)	16-1/2 (419)
F	15-1/2 (394)	N/A
G	3-1/2 (89)	3-1/2 (89)

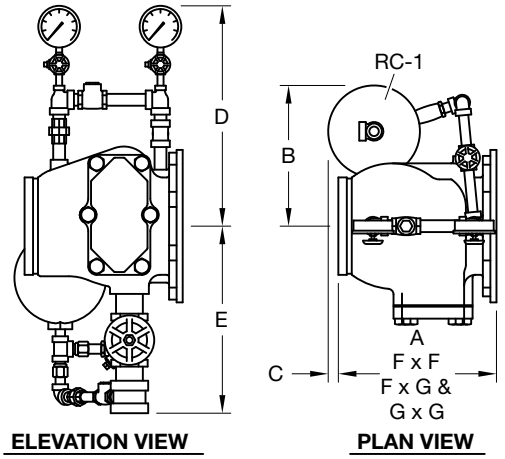

Horizontal Closed Drain Trim		
Dimension	Dimensions in Inches and (mm)	
	With RC-1	Without RC-1
A	14 (356)	14 (356)
B	15 (381)	12 (305)
C	1-1/2 (38)	N/A
D	19-1/2 (495)	19-1/2 (495)
E	16-1/2 (419)	16-1/2 (419)

FIGURE 7 (3 OF 3)
INSTALLATION DIMENSIONS
FOR 8 INCH (DN200) MODEL AV-1-300 ALARM CHECK VALVES

NO.	DESCRIPTION	QTY.	P/N
1	3/4" x 1/4" Hex Bushing	1	CH
2	3/32" Vent Fitting	1	92-032-1-002
3	1/4" x 5'-0" Tubing	1	CH

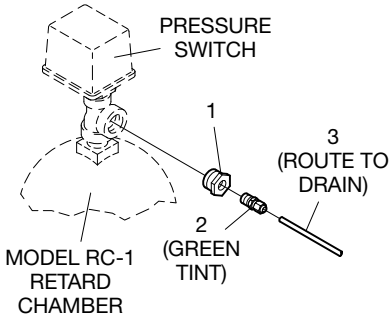

Note: The Trim kit is ordered separately when a Water Motor Alarm is not installed.

FIGURE 8
ALARM VENT TRIM KIT
(P/N 52-201-2-012)

Care and Maintenance

The following procedures and inspections should be performed in accordance with this section, in addition to any specific requirements of the NFPA. Any impairment must be immediately corrected.

NOTICE

Performing the care and maintenance procedures will result in operation of the associated alarms. Consequently, notification must first be given to the owner and fire department, central station, or other signal station to which the alarms are connected.

Before closing a fire protection system main control valve for maintenance work on the fire protection system that it controls, obtain permission to shut down the affected fire protection system from the proper authorities and notify all personnel who may be affected by this decision.

The owner is responsible for the inspection, testing, and maintenance of their fire protection system and devices in compliance with this document, as well as with the applicable standards of the NATIONAL FIRE PROTECTION ASSOCIATION such as NFPA 25, in addition to the standards of any other authorities having jurisdiction. Contact the installing contractor or product manufacturer regarding any questions.

Automatic sprinkler systems are recommended to be inspected, tested, and maintained by a qualified Inspection Service in accordance with local requirements and/or national codes.

The TYCO Model AV-1-300 Alarm Check Valves do not require any regularly scheduled maintenance. It is recommended, however, that proper operation of the alarms be periodically verified in accordance with a procedure that is acceptable to the authority having jurisdiction. Any impairment must be immediately corrected.

Inspection Procedure
It is recommended that the following inspection procedure be performed at least quarterly by a qualified Inspection Service.

Step 1. Notify the proper authorities and all personnel who may be affected that an alarm test is to be performed.

Step 2. Open the end-of-line Inspector's Test Connection (or Alarm Test Valve, if acceptable to the authority having jurisdiction) and verify that the system alarms operate in accordance with the requirements of the authority having jurisdiction. Verify that the water motor alarm and/or the pressure alarm switch properly actuate and within the elapsed time required by the authority having jurisdiction.

Step 3. Verify that water is flowing out of the alarm line drain at a rate consistent with the 1/8 inch (3,2 mm) diameter drain orifice in the Restriction Assembly.

Step 4. Close the end-of-line Inspector's Test Connection (or Alarm Test Valve).

Step 5. Verify that water ceases to flow from the alarm line drain.

Step 6. Clean the 1/2 inch Strainer (located in the valve trim) as well as the 3/4 inch Strainer (located at the connection to the water motor alarm, as applicable). Be sure to replace the strainer baskets and tighten the caps securely.

NOTICE

Cleaning of the Strainers after each operation of the alarms is especially important in the case of water supplies (such as lakes and rivers) having a large quantity of suspended matter. A clogged alarm line can prevent operation of the alarms.

Step 7. Notify all authorities responsible for monitoring the installation that the fire protection system has been returned to service.

Sprinkler System Drain-Down
Draining the sprinkler system must be done in accordance with the following procedure:

Step 1. Close the main control valve, if this has not already been done.

Step 2. Open the remote cross main or branch line vent connection. (Refer to Step 7 in the Installation section.)

Step 3. Open the Main Drain Valve. Check first to see that the drainage water discharge will not cause damage or result in dangerous conditions.

Step 4. Wait until the Supply Pressure Gauge reads zero pressure and the sound of draining water has stopped before performing any maintenance work on the fire protection system.

Leakage from Alarm Line Drain
Follow the steps indicated below until water ceases to flow from the alarm line drain. After each step check if leakage has stopped.

Step 1. Open the Main Drain Valve. Let the water flow for about 5 seconds and then close the Main Drain Valve. This should flush any loose debris that may have become trapped between the Clapper Facing and the Seat Ring or in the seating area of the Drain Valve.

Step 2. Repeat Step 1 if the rate of continued flow out of the drain was noticeably reduced.

Step 3. Open the Alarm Test Valve and allow water to flow for about 5 seconds before re-closing the valve. This should flush any loose debris that may have become trapped in the seating area of the Alarm Test Valve.

Step 4. Repeat Step 3 if the rate of continued flow out of the drain was noticeably reduced.

Step 5. Determine whether the water is flowing from the Alarm Port as shown in Figure 1, or past the Alarm Test Valve. If the leakage is past the Alarm Test Valve, close the main control valve, and then repair or replace the Alarm Test Valve as necessary.

Step 6. If it appears that the leakage noted in Step 5 is from the Alarm Port, drain the system in accordance with the prescribed procedure. After the system has been drained, remove the Handhole Cover.

Step 7. While holding the Spring down by the coils, remove the Hinge Pin. Remove the Spring and Waterway Clapper Assembly.

Nominal Valve Sizes in. (DN)	Recom-mended Torque lb-ft (N·m)	Maximum Torque lb-ft (N·m)
2-1/2 (DN65)	20 (27)	39 (52)
4 (DN100)	27 (36)	39 (52)
6 (DN150)	50 (67)	60 (80)
8 (DN200)	90 (122)	120 (160)

TABLE C
HANDHOLE COVER BOLTS
MAXIMUM TORQUE

Step 8. Using a light, check for and remove any debris that may have become lodged within the Seat Ring groove. Inspect the Seat Ring seat for any damage. If the Seat Ring has become dented across the seat then the Alarm Check Valve will have to be replaced. It is impractical to re-face a Seat Ring in the field.

Step 9. Check for and remove any debris that may have become lodged in the Clapper Facing. If a minor imperfection remains in the Clapper Facing, then turn it over after thoroughly cleaning both surfaces with a clean cloth. Replace the Clapper Facing if necessary. Be sure to securely re-tighten the retaining fastener for the Clapper Washer.

Step 10. Replace the Spring and Waterway Clapper Assembly as shown in Figure 1. While holding the coils of the Spring down, re-insert the Hinge Pin. Be sure that the Hinge Pin is pushed all the way to the rear of the valve.

Step 11. Install Handhole Cover:

- **a.** Align Handhole Cover Gasket and Handhole Cover in proper orientation with valve body as shown in Figure 1, and hold in place.
- **b.** Apply LOCTITE No. 242 (or equivalent) to Hex Bolt threads.
- **c.** Insert Hex Bolts through Handhole Cover Gasket and Handhole Cover, hand-tighten into valve body.
- **d.** Using crossdraw sequence to assure uniformity, wrench-tighten Hex Bolts to recommended torque values, see Table C.
- **e.** Inspect to assure all Hex Bolts are securely tightened.

Step 12. Return the Alarm Valve to operation in accordance with the steps described in the Setting Procedure section.

Clogged Alarm Line Drain
If water either does not flow or only dribbles out of the alarm line drain during an alarm test, then it is likely that the screen protecting the Restriction Assembly drain orifice as shown in Figure 3, has become clogged.

NOTICE

For variable pressure systems, a clogged alarm line drain will increase the likelihood of a false alarm.

First break the union downstream of the Drain Restriction and remove the Drain Restriction for cleaning by backflushing the screen. Re-install the Drain Restriction and re-assemble the drain line.

Loss of Excess System Pressure
For variable pressure systems, the System Pressure Gauge normally indicates a pressure greater than that shown by the Supply Pressure Gauge. Also, the value should be close to that of the peak supply pressure that has occurred after the system was placed in service.

NOTICE

For variable pressure systems, loss of excess system pressure will increase the likelihood of a false alarm.

Follow the procedure indicated below to correct a loss of excess system pressure condition.

Step 1. Check for signs of continued leakage from the alarm line drain. If rust stains and/or water deposits indicate that continued leakage has been taking place, take corrective action according to the procedure described in the subsection entitled "Leakage from Alarm Line Drain."

Step 2. If there are no signs of continued leakage from the alarm line drain, close the main control valve, slowly remove the plug from the supply pressure gauge test valve to relieve the supply pressure, and then slowly open the union in the externally mounted bypass.

Step 3. Check for leakage past the Bypass Check Valve. If there is leakage, debris may have become lodged between its clapper and seat. Drain the system in accordance with the prescribed procedure and then clean or replace the Bypass Check Valve as required.

Step 4. Re-assemble the externally mounted bypass, replace the plug into the Gauge Test Valve, and return the fire protection system to operation in accordance with the steps described in the Operation section.

Step 5. If there are no signs of leakage past either the Alarm Check Valve Clapper per Step 1 or the Bypass Check Valve per Step 2, inspect the sprinkler system for leakage.

Excess Pressure Due to Thermal Expansion
Wet pipe sprinkler systems subject to ambient temperatures in excess of 100°F (38°C) can experience significant increases in system pressure due to the thermal expansion of the water. In particular, a gridded wet-pipe system with a relatively small air pocket and no relief valve can be subjected to an increase of more than 100 psi (6,9 bar), due to an increase in ambient temperature of approximately 50°F (28°C).

As necessary, install a pressure relief valve, in accordance with the requirements of the authority having jurisdiction, to automatically relieve the excess pressure that could otherwise be created in wet-pipe systems exposed to significant increases in ambient temperature.

False Alarms
Follow the step below when repeated false alarms occur in a variable pressure system.

Step 1. Check for and correct the cause of continued leakage out the alarm line drain.

Step 2. Check for and clean a clogged alarm line drain.

Step 3. Check for and correct the cause of a loss in excess system pressure.

Step 4. Drain the sprinkler system and re-fill it using the steps described in the Setting Procedure section.

Intermittent Alarms
If the pressure alarm switch gives a steady signal, but the water motor generates an intermittent alarm, check for binding in the water motor alarm drive shaft.

If the water motor alarm and/or the pressure alarm switch provide an intermittent alarm, it is likely the consequence of an excessive amount of air being trapped within the sprinkler system. Drain down the sprinkler system and refill it using the steps described in the Setting Procedure section.

A discontinuance of an alarm may also be caused by the Clapper closing due to a sudden drop in supply pressure or the shut-off of a pump in the supply line. These types of problems can only be corrected by maintaining a steady supply pressure.

Limited Warranty

For warranty terms and conditions, visit www.tyco-fire.com.

Ordering Procedure

Contact your local distributor for availability. When placing an order, indicate the full product name. Refer to Table A (Page 3) for Flange Drilling Specifications. The Price Book provides Part Numbers (P/Ns) for factory pre-trimmed Model AV-1-300 Valves.

Standard AV-1-300 Alarm Check Valve

(Assumes American Standard Flange Drilling, American Threaded Ports, and American Groove Outside Diameter, as applicable.)

Specify: (size in inches) Model AV-1-300 Alarm Check Valve with (end connections), P/N (specify):

2-1/2 Inch Valves

2.88 inch (73,0 mm) Groove O.D. x
2.88 inch (73,0 mm) Groove O.D.
2-1/2 Inch G x G 52-203-1-110

ANSI Flange x
2.88 inch (73,0 mm) Groove O.D.
2-1/2 Inch F x G. 52-203-1-210

4 Inch Valves

4.50 inch (114,3 mm) Groove O.D. x
4.50 inch (114,3 mm) Groove O.D.
4 Inch G x G 52-203-1-113

ANSI Flange x
4.50 inch (114,3 mm) Groove O.D.
4 Inch F x G. 52-203-1-413

ANSI Flange x ANSI Flange
4 Inch F x F 52-203-1-013

6 Inch Valves

6.62 inch (168,3 mm) Groove O.D. x
6.62 inch (168,3 mm) Groove O.D.
6 Inch G x G 52-203-1-115

ANSI Flange x
6.62 inch (168,3 mm) Groove O.D.
6 Inch F x G. 52-203-1-615

ANSI Flange x ANSI Flange
6 Inch F x F 52-203-1-015

8 Inch Valves

8.62 inch (219,1 mm) Groove O.D. x
8.62 inch (219,1 mm) Groove O.D.
8 Inch G x G 52-203-1-916

ANSI Flange x
8.62 inch (219,1 mm) Groove O.D.
8 Inch F x G. 52-203-1-816

ANSI Flange x ANSI Flange
8 inch F x F 52-203-1-016

AV-1-300 Valve Trim

Standard Order
Specify: Vertical, Closed Drain Galvanized Trim for (size) Model AV-1-300 Alarm Check Valve, P/N (specify):

Vertical Closed Drain, Galvanized
(See Figure 4)
2-1/2 Inch 52-204-4-950
4 or 6 Inch* 52-204-4-951
8 Inch* 52-204-4-952
*Provided semi-preassembled

Special Order
Specify: (Vertical or Horizontal), (Closed or Open) Drain Galvanized Trim for (size) Model AV-1-300 Alarm Check Valve, P/N (specify):

Vertical Open Drain, Galvanized
(See Figure 5)
2-1/2 Inch 52-204-4-053
4 or 6 Inch* 52-204-4-954
8 Inch* 52-204-4-955
*Provided semi-preassembled

Horizontal Closed Drain, Galvanized
(See Figure 6)
4 or 6 Inch 52-204-4-057
8 Inch 52-204-4-058

Accessories

Order the following accessories, as applicable:

Model RC-1
Retard Chamber 52-211-1-002
(Required for variable pressure water supply conditions.)

Alarm Vent Trim. 52-201-2-012
(Required when a water motor alarm is not installed.)

Model PS10-2 Potter Electric Waterflow
Pressure Alarm Switch 25710
(Required for electric signal indicating waterflow.)

Model WMA-1 Water Motor Alarm
Red Finish Gong 52-630-1-001P
Aluminum Finish Gong. 52-630-2-001P
(Required for a mechanical waterflow alarm.)

Optional 600 PSI Water
Pressure Gauge 92-343-1-004

Replacement Parts

Valve
Specify: (description) for use with (size) Model AV-1-300 Alarm Check Valve, P/N (specify, see Figure 1)

Trim
Specify: (description) for use with Model AV-1-300 Alarm Check Valve, P/N (specify, see Figure 4, 5, or 6)

Other Model AV-1-300 Configurations

Other AV-1-300 Alarm Check Valves are valves ordered with any combination of flange, threaded port, or groove outside diameter not offered under Standard AV-1-300 Alarm Check Valve offerings.

Valves with NPT threaded ports are intended for use with the AV-1-300 Valve Trim described in this data sheet. Valves with ISO threaded ports are intended for use with special order trim that is provided by local distributors to meet the specific needs of certain localities. Contact your local distributor regarding valves and valve trim for specific localities.

Specify: (size) Model AV-1-300 Alarm Check Valve with (connections) with (NPT or ISO) threaded ports, P/N (specify):

2-1/2 Inch Valves with NPT Ports

ISO (PN16) Flange x
2.88 inch (73,0 mm)
Groove O.D. 52-203-1-251

ANSI Flange x
3.00 inch (76,1 mm)
Groove O.D. 52-203-1-220

ISO (PN16) Flange x
3.00 inch (76,1 mm)
Groove O.D. 52-203-1-331

AS Flange x
2.88 inch (73,0 mm)
Groove O.D 52-203-1-611

AS Flange x
3.00 inch (76,1 mm)
Groove O.D. 52-203-4-410

JIS Flange x
2.88 inch (73,0 mm)
Groove O.D. 52-203-1-710

JIS Flange x
3.00 inch (76,1 mm)
Groove O.D. 52-203-1-810

3.00 inch (76,1 mm) Groove O.D x
3.00 inch (76,1 mm)
Groove O.D. 52-203-1-120

2-1/2 Inch Valves with ISO Ports

ISO (PN16) Flange x
2.88 inch (73,0 mm)
Groove O.D. 52-203-1-211

ISO (PN16) Flange x
3.00 inch (76,1 mm)
Groove O.D. 52-203-1-311

3.00 inch (76,1 mm) Groove O.D. x
3.00 inch (76,1 mm)
Groove O.D. 52-203-4-120

2.88 inch (73,0 mm) Groove O.D. x
2.88 inch (73,0 mm)
Groove O.D. 52-203-1-921

4 Inch Valves with NPT Ports

ISO (PN16) Flange x
4.50 inch (114,3 mm)
Groove O.D. 52-203-1-493

ISO (PN16) Flange x
ISO (PN16) Flange. 52-203-4-013

AS Flange x
AS Flange 52-203-4-313

AS Flange x
4.50 inch (114,3 mm)
Groove O.D. 52-203-4-413

JIS Flange x
JIS Flange 52-203-4-713

JIS Flange x
4.50 inch (114,3 mm)
Groove O.D. 52-203-4-813

4 Inch Valves with ISO Ports

ISO (PN16) Flange x
ISO Flange 52-203-4-113

ISO (PN16) Flange x
4.50 inch (114,3 mm)
Groove O.D. 52-203-4-213

4.50 inch (114,3 mm) Groove O.D. x
4.50 inch (114,3 mm)
Groove O.D. 52-203-1-923

6 Inch Valves with NPT Ports

ANSI Flange x
6.50 inch (165,1 mm)
Groove O.D. 52-203-1-625

ISO (PN16) Flange x
6.62 inch (168,3 mm)
Groove O.D. 52-203-1-695

ISO (PN16) Flange x
6.50 inch (165,1 mm)
Groove O.D. 52-203-5-215

ISO (PN16) Flange x
ISO (PN16) Flange. 52-203-4-015

AS Flange x
AS Flange 52-203-4-315

AS Flange x
6.62 inch (168,3 mm)
Groove O.D. 52-203-4-415

AS Flange x
6.50 inch (165,1 mm)
Groove O.D. 52-203-4-425

JIS Flange x
JIS Flange 52-203-4-715

JIS Flange x
6.62 inch (168,3 mm)
Groove O.D. 52-203-4-815

JIS Flange x
6.50 inch (165,1 mm)
Groove O.D. 52-203-5-815

6.50 inch (165,1 mm) Groove O.D. x
6.50 inch (165,1 mm)
Groove O.D. 52-203-1-124

6 Inch Valves with ISO Ports

ISO (PN16) Flange x
ISO (PN16) Flange. 52-203-4-115

ISO (PN16) Flange x
6.62 inch (168,3 mm)
Groove O.D. 52-203-4-215

ISO (PN16) Flange x
6.50 inch (165,1 mm)
Groove O.D. 52-203-4-225

6.62 inch (168,3 mm) Groove O.D. x
6.62 inch (168,3 mm)
Groove O.D. 52-203-1-925

6.50 inch (165,1 mm) Groove O.D. x
6.50 inch (165,1 mm)
Groove O.D. 52-203-1-125

8 Inch Valves with NPT Ports

ISO (PN10) Flange x
8.62 inch (219,1 mm)
Groove O.D. 52-203-1-896

ISO (PN16) Flange x
8.62 inch (219,1 mm)
Groove O.D. 52-203-4-266

ISO (PN10) Flange x
ISO (PN10) Flange. 52-203-4-016

ISO (PN16) Flange x
ISO (PN16) Flange. 52-203-4-118

AS Flange x
AS Flange 52-203-4-316

AS Flange x
8.62 inch (219,1 mm)
Groove O.D. 52-203-4-416

JIS Flange x
JIS Flange 52-203-1-716

JIS Flange x 8.62 inch (219,1 mm)
Groove O.D. 52-203-4-816

8 Inch Valves with ISO Ports

ISO (PN10) Flange x
ISO (PN10) Flange. 52-203-4-116

ISO (PN16) Flange x
ISO (PN16) Flange. 52-203-4-117

ISO (PN10) Flange x
8.62 inch (219,1 mm)
Groove O.D. 52-203-4-216

ISO (PN16) Flange x
8.62 inch (219,1 mm)
Groove O.D. 52-203-4-226

8.62 inch (219,1 mm) Groove O.D. x
8.62 inch (219,1 mm)
Groove O.D. 52-203-1-926

1400 Pennbrook Parkway, Lansdale, PA 19446 | Telephone +1-215-362-0700

© 2020 Johnson Controls. All rights reserved. All specifications and other information shown were current as of document revision date and are subject to change without notice.

NATIONAL FIRE PROTECTION ASSOCIATION and NFPA are registered trademarks of National Fire Protection Association;
LOCTITE is a registered trademark of Henkel Corporation

Johnson Controls