PI NOLEAK PES
ENTERPRISES CORPORATION
NO LEAK BETWEEN THE PIPES



UYUAN®

XGQT03 TEE

Reliable Grooved Fitting Solution

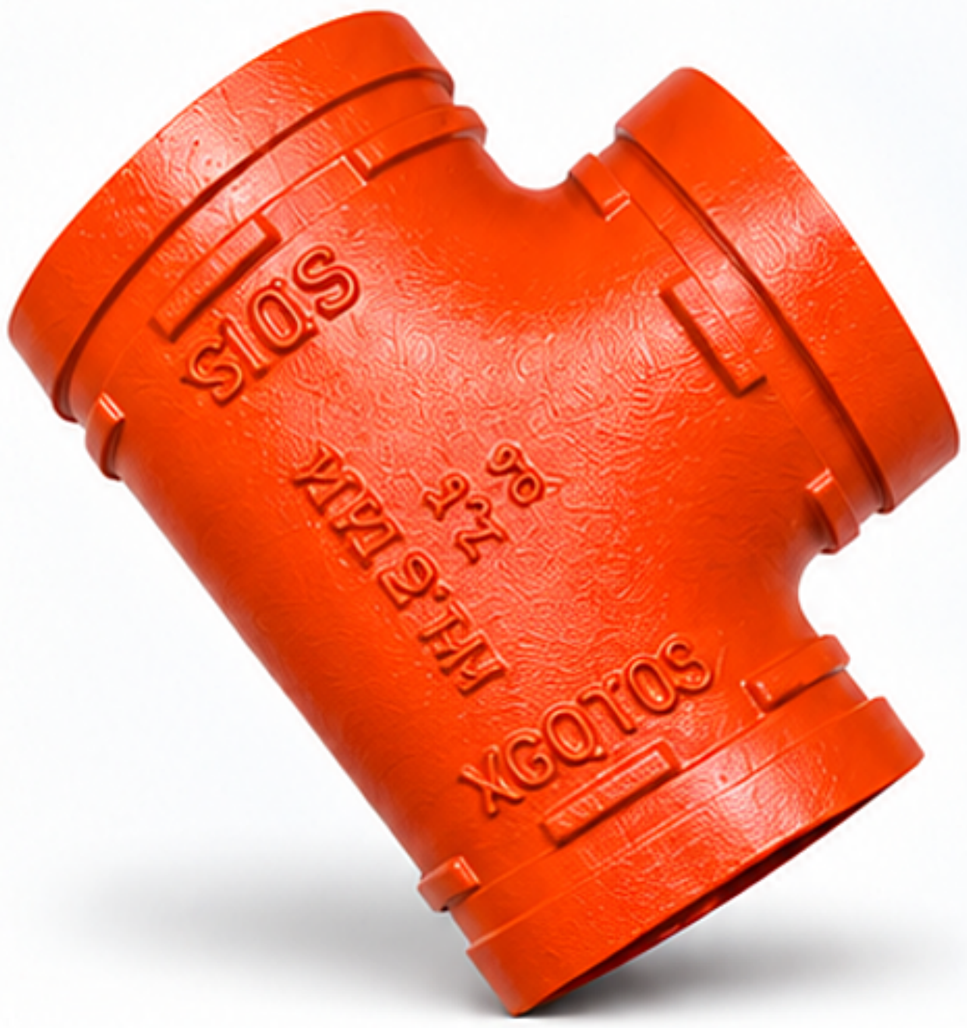

Working Pressure: 300 PSI / 2.07 MPa

Nominal Size mm/in	Pipe O.D mm/in	Working Pressure PSI/MPa	Dimension L mm/in	
			Standard	Short
25 / 1	33.7 / 1.315	300 / 2.07	57 / 2.244	57 / 2.244
32 / 1¼	42.4 / 1.66	300 / 2.07	70 / 2.756	60 / 2.362
40 / 1½	48.3 / 1.9	300 / 2.07	70 / 2.756	60 / 2.362
50 / 2	60.3 / 2.375	300 / 2.07	83 / 3.268	70 / 2.756
65 / 2½	73 / 2.875	300 / 2.07	95 / 3.740	76 / 2.992
65 / 3OD	76.1 / 3	300 / 2.07	95 / 3.740	76 / 2.992
80 / 3	88.9 / 3.5	300 / 2.07	108 / 4.252	86 / 3.386
100 / 4	114.3 / 4.5	300 / 2.07	127 / 5.000	102 / 4.016
125 / 5½OD	139.7 / 5.5	300 / 2.07	140 / 5.512	122 / 4.803
150 / 6½ OD	165.1 / 6.5	300 / 2.07	165 / 6.496	140 / 5.512
150 / 6	168.3 / 6.625	300 / 2.07	165 / 6.496	140 / 5.512
200 / 8	219.1 / 8.625	300 / 2.07	197 / 7.756	175 / 6.890
250 / 10	273 / 10.75	300 / 2.07	229 / 9.016	215 / 8.465
300 / 12	323.9 / 12.75	300 / 2.07	254 / 10.000	245 / 9.646

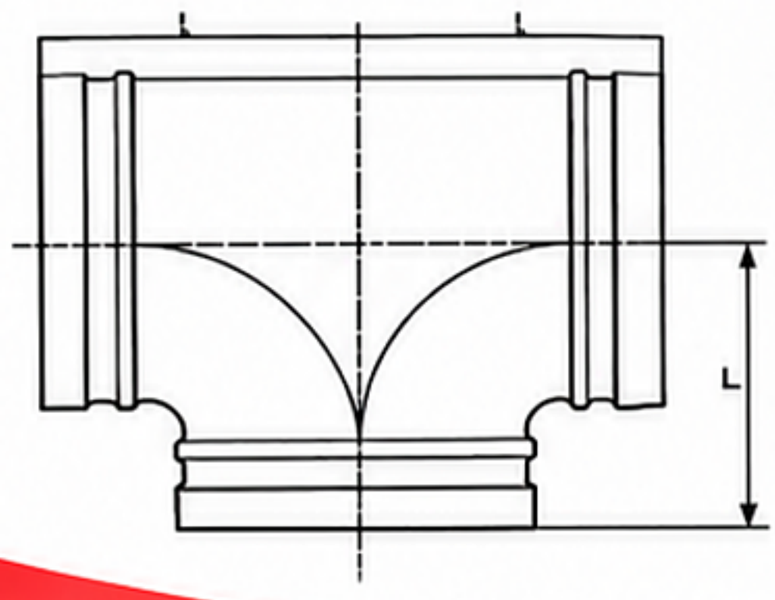

09159252309 | nowserving02@gmail.com / nowserving03@gmail.com | https://www.pinoleakpes.com/